ISO9001 CE LISTED APPROVED

WEIZIDOM

## WEIZIDOM GROUP


集 团 总 部：中国・郑州华南城中原电商大厦
分 工 厂：上海・天津・河北・山东・温州・连云港
驻外分公司：非洲・坦桑尼亚・赞比亚・肯尼亚

Group headquarters: Central Plains E-Commerce Buliding, Zhengzhou South City, China
Branch Factory: Shanghai, Tianjin, Hebei, Shandong, Wenzhou, lianyungang
Branch Company in Overseas: Tanzania, Zambia, Kenya in Africa

销 售 热 线：+86-13849013722

Sales Hotline: +86-13849013722

www.wsdsolution.com
www.wsdvalves.com

info@wsdvalve.com
weisidun@hawsd.com

www.facebook.com/hawsd

Www.linkedin.com/company/henan-wesdom


WEIZIDOM

# Fire Protection Series

WEIZIDOM GROUP

# WEIZIDOM GROUP
## Enterprise Social Responsibility

WEIZIDOM are not only concerned about products, services and solutions.

**WEIZIDOM promise to implement sustainable development and benefit society with energy-saving and environmental protection.**

Our Purpose: People–Oriented, Hard Work, Never forget the original intention, Innovation and forge ahead.

Our Mission: To be a high–quality supplier of fluid control systems and plan maker; To contribute our wisdom and strength to the development of the cutting–edge technology of fluid control systems.

Our Vision: Explore the internal innovation spirit and creativity, pursuit, innovation and continuous improvement. Use wisdom, foresight and hard work to make "WEIZIDOM" a world–renowned brand; Make the group company grow into a respectable "Four Satisfaction" enterprise.

Customer Satisfaction: Use high–quality products and refined services to add value to customers.

Employee Satisfaction: People–oriented, build a platform for all employees to realize their dreams, everyone is the CEO.

Partner Satisfaction: Mutual promotion, improve, mutual benefit and win–win.

Shareholder Satisfaction: Enable the company to develop and grow, and return profits.

Our Values: Create differentiated value–added services for customers, let everyone in the company has a sense of accomplishment.

# WEIZIDOM GROUP
## Development History

**2010**
WEIZIDOM was established

**2015**
WEIZIDOM established the first overseas branch

**2016**
WEIZIDOM products are exported to overseas regions and markets

In December 2010, WESDOM was registered with a registered capital of 5 million yuan;

June 2013, WESDOM passed ISO and other international certifications;

In June 2014, TIANJIN WESDOM VALVE MANUFACTURING CO.,LTD. was established in Tianjin, where the production of butterfly valves is concentrated;

In July 2015, the first overseas branch company WEISIDUN MATERIAL SOLUTION COMPANY was established in the beautiful African continent –Tanzania, and WESDOM began to expand into the international market;

In December 2015, WESDOM established a special foreign trade import and export company in Zhengzhou, the hinterland of the Central Plains HENAN WEISIDUN IMPORT AND EXPORT TRADE CO.,LTD.,to make up for the domestic shortcomings of entering the international market;

In 2016, WESDOM brand products have been exported to Tanzania, Zambia, Egypt, Turkey, Pakistan, Thailand, Indonesia, Vietnam, the Philippines, Saudi Arabia, Mexico and other countries and regions;

In 2017, the company carried out production, procurement adjustments and layouts, expanded product series, initially formed a production and procurement system for water series products (control and connection systems), and established a procurement system for major production clusters across the south and north. ;

**2018**
Zambia branch was established, and the group company expanded its measurement products series

**2019**
WESDOM launched a series of plastic materials

**2020**
WESDOM sales exceeded 20 million USD

**2021**
Kenya branch is established, WESDOM products occupy the African market

……

In January 2018, the second exclusive import and export company was established –HENAN WESDOM FLOW CONTROL CO.,LTD.In August of the same year, the second overseas branch company –WESDOM VALVES AND FITTINGS COMPANY LIMITED was established in Zambia, Africa;

In 2018, the series of measurement products (water meters, flow meters) were expanded, and the supply chain system was further enriched and improved;

In 2019, a series of plastic material products were launched; the company's valves and pipe fittings passed the CE certification; WESDOM overall sales performance exceeded 90 million in the same year;

In 2020, under the influence of the unfavorable factors of the domestic and foreign epidemic situation, the company has achieved the goal of breaking 100 million yuan in addition to the continuous growth of sales.

In April 2021, the Kenya branch WESDOM VALVES AND FITTINGS(K) CO LIMITED was established and operated well, its products occupy the African market successfully.

To be continued...

# WEIZIDOM GROUP
## Company Introduction

WEIZIDOM Group specializes in pipeline fluid systems: R&D, production and sales of valves, pipe fittings, water meters, flow meters, etc. The products cover cast iron, cast steel, stainless steel, copper, plastic and other materials, which are widely used in hydropower stations, heat, buildings, Water supply and drainage, petroleum, chemical industry, electric power, medical and other fields.

In recent years, WEIZIDOM Group has actively embraced the era of Internet of Everything, committed to IoT terminal control and artificial intelligence design, big data mining and development, and promoted smart hardware to move towards big data center and wisdom with excellent market foresight and technological innovation. The smart cities, smart heating, smart water and other fields are in progress.

In the early stage, the Internet of Things smart valves and smart water meters were developed to promote and apply smart control systems such as municipal heating and municipal water supply.

In terms of quality control, we have strict control procedures. From the raw materials entering the factory to the final product leaving the factory, after 24 quality inspection passes, each pass must ensure that the product quality is 100% qualified before it can flow into the next process, thus ensuring that the qualified rate of the finished products. WEIZIDOM products can well meet the Chinese standard like GB, JB, HB; American standard like API, ASME, AWWA; British and EU standards like BS, EN, ISO; German standard DIN; Japanese standard JIS; Russian standard GOST and other standards.

## Quality Inspection

WEIZIDOM Group attaches great importance to product quality, we have the independent laboratory, advanced technology research, sophisticated testing equipment, and a professional technical team. The fire fighting protection series products are produced by real–time analysis and strict physical and chemical testing to control the product quality effectively. We ensure the quality reliability from raw material to finished products when leaving the factory. The castings has passed PT, RT flaw detection and mechanical performance test, the parts have been tested by spectrum, hardness, tensile, etc., and the quality of parts is strictly controlled, the finished products have passed the whole process performance test such as strength and sealing, and the quality of the finished product is strictly controlled.

Each WEIZIDOM product quality is totally ensured, and we well received good reputation from our clients all over the world.

Product testing Category:

- Grooved Steel Pipe
- Galvanized Pipe Fittings
- Groove Pipe Fitting
- Fire Fighting Valve
- Fire Control Series
- Fire Sprinkler

WEIZIDOM GROUP

# Company Qualification

# Company Qualification

WEIZIDOM

# Show Cases

## Fire fighting pipes for Colombia bulding project

- Customer Name: Contractor in Colombia
- Main purchasing products: UL/FM Pipes
- Projects Pictures: As followings
- Projects Details: The customer is one of the contractors for installing fire fighting projects. WEIZIDOM team has sent products pics, workshop pics and other fire fighting cases pictures, the client compare the prices from different suppliers and finally choose us, even our price is not the cheapest. We met in Colombia and client told us that WEIZIDOM team is professional and have excellent service. They will purchase valves, pipe fittings from us soon, believe we will have long term cooperation.

## Fire protection project in Ho Chi Minh City, Vietnam

- Provide the valves and pipe fittings required for the overall project, and assist customers to efficiently complete the project construction with guaranteed time, quality and quantity
- Products: API Gate Valve, Check Valve, Globe Valve, Strainer.

## Fire fighting system in Nigeria

- The high quality gate valves with UL FM certification is recognized by our clients!

Show Cases

## The fire fighting products used in Zambia

Building project

We supplied the grooved gate valve,check valve, Y strainer and butterfly valve.

The end user is very satisfied with our products quality, now we have continuous cooperations with the contractor.

## Fire fighting products for Philippines client

Cement factory

Including check valve, butterfly valve, gate valve and fittings, we do supply the one-stop service with high quality products.

## Fire fighting accessories used in Kenya

We have the ability to supply the products for whole fire fighting system, Our aim is to solve the problems for our clients.

## Contents

01 Grooved Steel Pipe

03 Galvanized Pipe Fittings

25 Groove Pipe Fitting

42 Fire Fighting Valve



# Grooved Steel Pipe

**ASTM A795 Black and Red and Hot Dipped Zinc–Coated, Welded Steel Pipe for Fire Protection Use**

| Dimensions, Weights, and Test Pressure For Light-Weight Fire Protection Pipe-Schedule 10 A | | | | | | | | | |
|---|---|---|---|---|---|---|---|---|---|
| NPS Designator | DN Designator | Outside Diameter | | Wall Thickness | | Weight Plain End | | Test Pressure Seamless and Electric-Resistance-Welded | |
| | | in | mm | in | mm | lb/ft | kg/m | psi | MPa |
| 3/4 | 20 | 1.05 | 26.7 | 0.083 | 2.11 | 0.86 | 1.28 | 700 | 4.8 |
| 1 | 25 | 1.315 | 33.4 | 0.109 | 2.77 | 1.41 | 2.09 | 700 | 4.8 |
| 1 1/4 | 32 | 1.66 | 42.2 | 0.109 | 2.77 | 1.81 | 2.69 | 1000 | 6.9 |
| 1 1/2 | 40 | 1.9 | 48.3 | 0.109 | 2.77 | 2.09 | 3.11 | 1000 | 6.9 |
| 2 | 50 | 2.375 | 60.3 | 0.109 | 2.77 | 2.64 | 3.93 | 1000 | 6.9 |
| 2 1/2 | 65 | 2.875 | 73 | 0.12 | 3.05 | 3.53 | 5.26 | 1000 | 6.9 |
| 3 | 80 | 3.5 | 88.9 | 0.12 | 3.05 | 4.34 | 6.46 | 1000 | 6.9 |
| 3 1/2 | 90 | 4 | 101.6 | 0.12 | 3.05 | 4.98 | 7.41 | 1200 | 8.3 |
| 4 | 100 | 4.5 | 114.3 | 0.12 | 3.05 | 5.62 | 8.37 | 1200 | 8.3 |
| 5 | 125 | 5.563 | 141.3 | 0.134 | 3.4 | 7.78 | 11.58 | 1200 | 8.3 |
| 6 | 150 | 6.625 | 168.3 | 0.134 | 3.4 | 9.3 | 13.85 | 1000 | 6.9 |
| 8 | 200 | 8.625 | 219.1 | 0.188 | 4.78 | 16.96 | 25.26 | 800 | 5.5 |
| 10 | 250 | 10.75 | 273.1 | 0.188 | 4.78 | 21.23 | 31.62 | 700 | 4.8 |

| Dimensions, Weights, Test Pressures For Standard-Weight Fire Protection Pipe-Schedule 30 and Schedule 40 | | | | | | | | | |
|---|---|---|---|---|---|---|---|---|---|
| NPS Designator | DN Designator | Outside Diameter | | Wall Thickness | | Weight Plain End | | Test Pressure Seamless and Electric-Resistance-Welded | |
| | | in | mm | in | mm | lb/ft | kg/m | psi | MPa |
| 1/2 | 15 | 0.84 | 21.3 | 0.109 | 2.77 | 0.85 | 1.27 | 700 | 4.8 |
| 3/4 | 20 | 1.05 | 26.7 | 0.113 | 2.87 | 1.13 | 1.68 | 700 | 4.8 |
| 1 | 25 | 1.315 | 33.4 | 0.133 | 3.38 | 1.68 | 2.5 | 700 | 4.8 |
| 1 1/4 | 32 | 1.66 | 42.2 | 0.14 | 3.58 | 2.27 | 3.4 | 1000 | 6.9 |
| 1 1/2 | 40 | 1.9 | 48.3 | 0.145 | 3.68 | 2.72 | 4.07 | 1000 | 6.9 |
| 2 | 50 | 2.375 | 60.3 | 0.154 | 3.91 | 3.66 | 5.5 | 1000 | 6.9 |
| 2 1/2 | 65 | 2.875 | 73 | 0.203 | 5.16 | 5.8 | 8.68 | 1000 | 6.9 |
| 3 | 80 | 3.5 | 88.9 | 0.216 | 5.49 | 7.58 | 11.35 | 1000 | 6.9 |
| 3 1/2 | 90 | 4 | 101.6 | 0.226 | 5.74 | 9.12 | 13.71 | 1200 | 8.3 |
| 4 | 100 | 4.5 | 114.3 | 0.237 | 6.02 | 10.8 | 16.25 | 1200 | 8.3 |
| 5 | 125 | 5.563 | 141.3 | 0.258 | 6.55 | 14.63 | 22.07 | 1200 | 8.3 |
| 6 | 150 | 6.625 | 168.3 | 0.28 | 7.11 | 18.99 | 28.6 | 1200 | 8.3 |
| 8 | 200 | 8.625 | 219.1 | 0.277 | 7.04 | 24.72 | 38.09 | 1200 | 8.3 |
| 10 | 250 | 10.75 | 273.1 | 0.307 | 7.8 | 34.27 | 53.29 | 1000 | 6.9 |

Note 1.1psi=0.07031kg/cm$^2$ 2.1lb/ft=0.45359kg/ft

# Galvanized Pipe Fittings

JIANZHI & HITHERTOP

适用于额定工作压力(1.6MPa)和工作温度(200℃)范围内，输送液体如：水，油，气(天然气、煤气、水蒸气)等一般管路的连接。

表面处理：涂漆、喷涂、热镀锌、电镀锌

Suitable for pressure Max 1.6MPa, temperature Max 200℃, and for pipeline holding water, oil, gas, etc.

Finishing: (Black) Painting, Galvanizing, Elctro-plating

**执行标准**

企业标准 Q/JZ 01-2009(修改采用日本标准JIS B2301)
国家标准 GB/T 3287-2000
国际标准 ISO5922/ISO46/ISO7-1
英国欧盟标准 BS EN1562:1997
德国标准 DIN2950/1692/2999
美国标准 ANSI/ASTM A 197/A 197M-2000
ANSI/ASTM 16.3-92/B1.20.1-83

**Standards**

Company Standard:Q/JZ 01-2009(Partially based on JIS B2301)
GB/T 3287-2000
ISO5922/ISO46/ISO7-1
BS EN1562:1997
DIN2950/1692/2999
ANSI/ASTM A 197/A 197M-2000
ANSI/ASTM 16.3-92/B1.20.1-83

**材料机械性能**

抗拉强度≥330MPa； 伸长率≥8%； 硬度≤HB150

**Mechanical Properties**

Tensile Strength ≥330MPa; Elongation rate ≥8%; Hardnedss ≤HB150

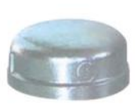

Fig.90

Fig.92

Fig.90R

Fig.120

Fig.1

Fig.2

Fig.40

Fig.41

Fig.220

Fig.270

Fig.240

Fig.529a

Fig.280

Fig.245

Fig. 130

Fig.131R

Fig.165

Fig.180

Fig.180R

Fig.330

Fig.331

Fig.340

Fig.341

Fig.342

Fig.95

Fig.97

Fig.241

Fig.290

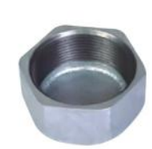
Fig.300

Fig.301

# Fig.90

**90° Elbow, Equal**

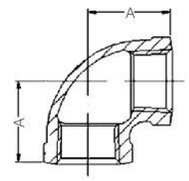


| Code | Size | | A | Unit Weight | | Packing |
|---|---|---|---|---|---|---|
| | | | | Black | Galv. | Carton |
| | NPS | DN | mm | g | g | Pcs/ctn |
| JZ9006 | 1/8" | 6 | 18 | 30.38 | 31 | 600 |
| JZ9008 | 1/4" | 8 | 20 | 42.14 | 43 | 600 |
| JZ9010 | 3/8" | 10 | 24 | 60.76 | 62 | 500 |
| JZ9015 | 1/2" | 15 | 27 | 96.04 | 98 | 400 |
| JZ9020 | 3/4" | 20 | 32 | 139.16 | 142 | 210 |
| JZ9025 | 1" | 25 | 37 | 213.64 | 218 | 120 |
| JZ9032 | 1 1/4" | 32 | 44.5 | 340.06 | 347 | 64 |
| JZ9040 | 1 1/2" | 40 | 48.5 | 423.36 | 432 | 48 |
| JZ9050 | 2" | 50 | 57 | 674.24 | 688 | 32 |
| JZ9065 | 2 1/2" | 65 | 68.5 | 1068.2 | 1090 | 16 |
| JZ9080 | 3" | 80 | 77.5 | 1489.6 | 1520 | 10 |
| JZ90100 | 4" | 100 | 96.5 | 2700.88 | 2756 | 6 |
| JZ90150 | 6" | 150 | 129 | 6089.72 | 6214 | 2 |

# Fig.92

**90° M&F Elbow, Equal**

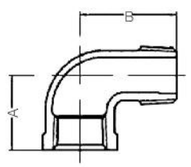


| Code | Size | | A | B | Unit Weight | | Packing |
|---|---|---|---|---|---|---|---|
| | | | | | Black | Galv. | Carton |
| | NPS | DN | mm | mm | g | g | Pcs/ctn |
| JZ9208 | 1/4" | 8 | 20 | 28 | 37.24 | 38 | 600 |
| JZ9210 | 3/8" | 10 | 25 | 33 | 54.88 | 56 | 500 |
| JZ9215 | 1/2" | 15 | 28 | 38 | 87.22 | 89 | 300 |
| JZ9220 | 3/4" | 20 | 33 | 44 | 132.3 | 135 | 180 |
| JZ9225 | 1" | 25 | 38 | 52 | 204.82 | 209 | 104 |
| JZ9232 | 1 1/4" | 32 | 45 | 60 | 339.08 | 346 | 60 |
| JZ9240 | 1 1/2" | 40 | 50 | 65 | 434.14 | 443 | 52 |
| JZ9250 | 2" | 50 | 58 | 74 | 701.68 | 716 | 26 |
| JZ9265 | 2 1/2" | 65 | 69 | 90 | 1125.04 | 1148 | 12 |
| JZ9280 | 3" | 80 | 77.5 | 100 | 1547.42 | 1579 | 10 |
| JZ92100 | 4" | 100 | 96.5 | 120 | 2703.82 | 2759 | 6 |





# Fig.90R

**90° Degree Elbow, Reducing**

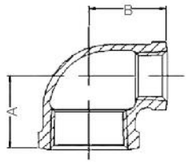


| Code | Size | | A | B | Unit Weight | | Packing |
|---|---|---|---|---|---|---|---|
| | | | | | Black | Galv. | Carton |
| | NPS | DN | mm | mm | g | g | Pcs/ctn |
| JZ90R1510 | 1/2" × 3/8" | 15 × 10 | 25 | 25 | 74.48 | 76 | 270 |
| JZ90R2015 | 3/4" × 1/2" | 20 × 15 | 29 | 30 | 122.5 | 125 | 270 |
| JZ90R2510 | 1" × 3/8" | 25 × 10 | 29 | 31 | 143.08 | 146 | 160 |
| JZ90R2515 | 1" × 1/2" | 25 × 15 | 31 | 33 | 161.7 | 165 | 160 |
| JZ90R2520 | 1" × 3/4" | 25 × 20 | 34 | 35 | 184.24 | 188 | 160 |
| JZ90R3210 | 1 1/4" × 1/2" | 32 × 10 | 31 | 36 | 213.64 | 218 | 100 |
| JZ90R3215 | 1 1/4" × 1/2" | 32 × 15 | 34 | 37 | 227.36 | 232 | 100 |
| JZ90R3220 | 1 1/4" × 3/4" | 32 × 20 | 36 | 40 | 252.84 | 258 | 100 |
| JZ90R3225 | 1 1/4" × 1" | 32 × 25 | 40 | 41 | 285.18 | 291 | 90 |
| JZ90R4015 | 1 1/2" × 1/2" | 40 × 15 | 35 | 41 | 266.56 | 272 | 90 |
| JZ90R4020 | 1 1/2" × 3/4" | 40 × 20 | 37 | 43 | 302.82 | 309 | 90 |
| JZ90R4025 | 1 1/2" × 1" | 40 × 25 | 41 | 45 | 342.02 | 349 | 70 |
| JZ90R4032 | 1 1/2" × 1 1/4" | 40 × 32 | 45 | 47 | 400.82 | 409 | 56 |
| JZ90R5015 | 2" × 1/2" | 50 × 15 | 37 | 47 | 398.86 | 407 | 68 |
| JZ90R5020 | 2" × 3/4" | 50 × 20 | 40 | 49 | 423.36 | 432 | 52 |
| JZ90R5025 | 2" × 1" | 50 × 25 | 43 | 51 | 476.28 | 486 | 50 |
| JZ90R5032 | 2" × 1 1/4" | 50 × 32 | 47 | 53 | 552.72 | 564 | 40 |
| JZ90R5040 | 2" × 1 1/2" | 50 × 40 | 51 | 54 | 588 | 600 | 30 |
| JZ90R6515 | 2 1/2" × 1/2" | 65 × 15 | 40.5 | 56 | 579.18 | 591 | 46 |
| JZ90R6520 | 2 1/2" × 3/4" | 65 × 20 | 43.5 | 57 | 613.48 | 626 | 40 |
| JZ90R6525 | 2 1/2" × 1" | 65 × 25 | 47.5 | 59 | 686 | 700 | 34 |
| JZ90R6532 | 2 1/2" × 1 1/4" | 65 × 32 | 51.5 | 61 | 732.06 | 747 | 30 |
| JZ90R6540 | 2 1/2" × 1 1/2" | 65 × 40 | 54.5 | 61 | 772.24 | 788 | 26 |
| JZ90R6550 | 2 1/2" × 2" | 65 × 50 | 59.5 | 64 | 904.54 | 923 | 24 |
| JZ90R8015 | 3" × 1/2" | 80 × 15 | 42.5 | 64 | 735.98 | 751 | 36 |
| JZ90R8020 | 3" × 3/4" | 80 × 20 | 45.5 | 65 | 770.28 | 786 | 30 |
| JZ90R8025 | 3" × 1" | 80 × 25 | 49.5 | 67 | 830.06 | 847 | 20 |
| JZ90R8032 | 3" × 1 1/4" | 80 × 32 | 54.5 | 69 | 931.98 | 951 | 20 |
| JZ90R8040 | 3" × 1 1/2" | 80 × 40 | 57.5 | 71 | 952.56 | 972 | 20 |
| JZ90R8050 | 3" × 2" | 80 × 50 | 61.5 | 71 | 1166.2 | 1190 | 12 |
| JZ90R8065 | 3" × 2 1/2" | 80 × 65 | 71.5 | 74 | 1319.08 | 1346 | 12 |
| JZ90R10015 | 4" × 1/2" | 100 × 15 | 49.5 | 78 | 1311.24 | 1338 | 14 |
| JZ90R10020 | 4" × 3/4" | 100 × 20 | 53.5 | 79 | 1326.92 | 1354 | 14 |
| JZ90R10025 | 4" × 1" | 100 × 25 | 56.5 | 82 | 1405.32 | 1434 | 14 |
| JZ90R10032 | 4" × 1 1/4" | 100 × 32 | 60.5 | 85 | 1550.36 | 1582 | 14 |
| JZ90R10040 | 4" × 1 1/2" | 100 × 40 | 62.5 | 85 | 1621.9 | 1655 | 10 |
| JZ90R10050 | 4" × 2" | 100 × 50 | 68.5 | 86 | 1711.08 | 1746 | 10 |
| JZ90R10065 | 4" × 2 1/2" | 100 × 65 | 77.5 | 89 | 1957.06 | 1997 | 8 |
| JZ90R10080 | 4" × 3" | 100 × 80 | 82.5 | 90 | 2164.82 | 2209 | 8 |

# Fig.120

**45° Elbow**

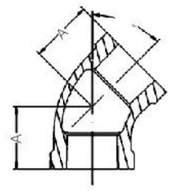


| Code | Size | | A | B | Unit Weight | | Packing |
|---|---|---|---|---|---|---|---|
| | | | | | Black | Galv. | Carton |
| | NPS | DN | mm | mm | g | g | Pcs/ctn |
| JZ9208 | 1/4" | 8 | 20 | 28 | 37.24 | 38 | 600 |
| JZ9210 | 3/8" | 10 | 25 | 33 | 54.88 | 56 | 500 |
| JZ9215 | 1/2" | 15 | 28 | 38 | 87.22 | 89 | 300 |
| JZ9220 | 3/4" | 20 | 33 | 44 | 132.3 | 135 | 180 |
| JZ9225 | 1" | 25 | 38 | 52 | 204.82 | 209 | 104 |
| JZ9232 | 1 1/4" | 32 | 45 | 60 | 339.08 | 346 | 60 |
| JZ9240 | 1 1/2" | 40 | 50 | 65 | 434.14 | 443 | 52 |
| JZ9250 | 2" | 50 | 58 | 74 | 701.68 | 716 | 26 |
| JZ9265 | 2 1/2" | 65 | 69 | 90 | 1125.04 | 1148 | 12 |
| JZ9280 | 3" | 80 | 77.5 | 100 | 1547.42 | 1579 | 10 |
| JZ92100 | 4" | 100 | 96.5 | 120 | 2703.82 | 2759 | 6 |

# Fig.1

**90 Degree M&F Long Sweep Bends**

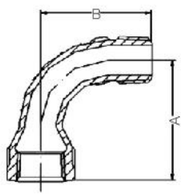


| Code | Size | | A | B | Unit Weight | | Packing |
|---|---|---|---|---|---|---|---|
| | | | | | Black | Galv. | Carton |
| | NPS | DN | mm | mm | g | g | Pcs/ctn |
| JZ110 | 3/8" | 10 | 48 | 42 | 71.54 | 73 | 400 |
| J2115 | 1/2" | 15 | 55 | 48 | 115.64 | 118 | 280 |
| JZ120 | 3/4" | 20 | 69 | 60 | 187.18 | 191 | 150 |
| JZ125 | 1" | 25 | 85 | 75 | 304.78 | 311 | 80 |
| JZ132 | 1 1/4" | 32 | 105 | 95 | 519.4 | 530 | 50 |
| JZ140 | 1 1/2" | 40 | 116 | 105 | 665.42 | 679 | 24 |
| JZ150 | 2" | 50 | 140 | 130 | 1123.08 | 1146 | 12 |
| JZ165 | 2 1/2" | 65 | 176 | 165 | 2067.8 | 2110 | 8 |
| JZ180 | 3" | 80 | 205 | 190 | 2955.68 | 3016 | 6 |
| JZ1100 | 4" | 100 | 260 | 245 | 5396.86 | 5507 | 2 |





# Fig.2

**90 Degree Female Long Sweep Bends**

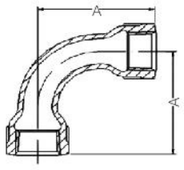


| Code | Size | | A | Unit Weight | | Packing |
|---|---|---|---|---|---|---|
| | | | | Black | Galv. | Carton |
| | NPS | DN | mm | g | g | Pcs/ctn |
| JZ210 | 3/8" | 10 | 48 | 87.22 | 89 | 400 |
| JZ215 | 1/2" | 15 | 55 | 142.1 | 145 | 220 |
| JZ220 | 3/4" | 20 | 69 | 223.44 | 228 | 120 |
| JZ225 | 1" | 25 | 85 | 372.4 | 380 | 70 |
| JZ232 | 1 1/4" | 32 | 105 | 607.6 | 620 | 40 |
| JZ240 | 1 1/2" | 40 | 116 | 807.52 | 824 | 20 |
| JZ250 | 2" | 50 | 140 | 1268.12 | 1294 | 12 |
| JZ265 | 2 1/2" | 65 | 176 | 2243.22 | 2289 | 8 |
| JZ280 | 3" | 80 | 205 | 3234 | 3300 | 6 |
| JZ2100 | 4" | 100 | 260 | 6056.4 | 6180 | 2 |

# Fig.40

**45 Degree M&F Long Sweep Bends**

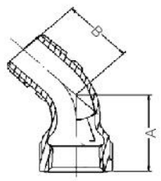


| Code | Size | | A | B | Unit Weight | | Packing |
|---|---|---|---|---|---|---|---|
| | | | | | Black | Galv. | Carton |
| | NPS | DN | mm | mm | g | g | Pcs/ctn |
| JZ4015 | 1/2" | 15 | 36 | 30 | 87 | 88 | 180 |
| JZ4020 | 3/4" | 20 | 43 | 36 | 88 | 144 | 160 |
| JZ4025 | 1" | 25 | 51 | 42 | 89 | 224 | 80 |
| JZ4032 | 1 1/4" | 32 | 64 | 54 | 90 | 362 | 50 |
| JZ4040 | 1 1/2" | 40 | 68 | 58 | 91 | 450 | 24 |
| JZ4050 | 2" | 50 | 81 | 70 | 92 | 752 | 12 |
| JZ4065 | 2 1/2" | 65 | 99 | 86 | 93 | 1344 | 8 |
| JZ4080 | 3" | 80 | 113 | 100 | 94 | 1963 | 6 |
| JZ40100 | 4" | 100 | 143 | 126 | | | 2 |

# Fig.41

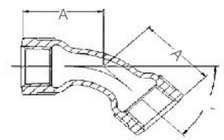


**45 Degree Female Long Sweep Bends**

| Code | Size | | A | Unit Weight | | Packing |
|---|---|---|---|---|---|---|
| | | | | Black | Galv. | Carton |
| | NPS | DN | mm | g | g | Pcs/ctn |
| JZ4115 | 1/2" | 15 | 36 | 119.56 | 122 | 180 |
| JZ4120 | 3/4" | 20 | 43 | 180.32 | 184 | 160 |
| JZ4125 | 1" | 25 | 51 | 286.16 | 292 | 80 |
| JZ4132 | 1 1/4" | 32 | 64 | 461.58 | 471 | 50 |
| JZ4140 | 1 1/2" | 40 | 68 | | | 24 |
| JZ4150 | 2" | 50 | 81 | | | 12 |
| JZ4165 | 2 1/2" | 65 | 99 | | | 8 |
| JZ4180 | 3" | 80 | 113 | | | 6 |
| JZ41100 | 4" | 100 | 142 | | | 2 |

# Fig.220

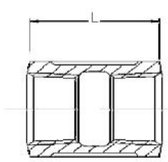


**Part Thread Sockets**

| Code | Size | | L | Unit Weight | | Packing |
|---|---|---|---|---|---|---|
| | | | | Black | Galv. | Carton |
| | NPS | DN | mm | g | g | Pcs/ctn |
| JZ22006 | 1/8" | 6 | 23.5 | / | / | / |
| JZ22008 | 1/4" | 8 | 26 | 36.26 | 37 | 800 |
| JZ22010 | 3/8" | 10 | 29 | 46.06 | 47 | 700 |
| JZ22015 | 1/2" | 15 | 35 | 80.36 | 82 | 450 |
| JZ22020 | 3/4" | 20 | 38 | 113.68 | 116 | 300 |
| JZ22025 | 1" | 25 | 44 | 176.4 | 180 | 180 |
| JZ22032 | 1 1/4" | 32 | 49 | 264.6 | 270 | 120 |
| JZ22040 | 1 1/2" | 40 | 53 | 319.48 | 326 | 72 |
| JZ22050 | 2" | 50 | 63 | 543.9 | 555 | 48 |
| JZ22065 | 2 1/2" | 65 | 72 | 825.16 | 842 | 32 |
| JZ22080 | 3" | 80 | 77.5 | 1003.52 | 1024 | 24 |
| JZ220100 | 4" | 100 | 91.5 | 1702.26 | 1737 | 10 |
| JZ220150 | 6" | 150 | 118 | 3776.92 | 3854 | 4 |





# Fig.270

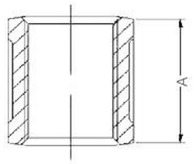


**Entire Thread Sockets**

| Code | Size | | A | Unit Weight | | Packing |
|---|---|---|---|---|---|---|
| | | | | Black | Galv. | Carton |
| | NPS | DN | mm | g | g | Pcs/ctn |
| JZ27008 | 1/4" | 8 | 26 | 38.22 | 39 | 800 |
| JZ27010 | 3/8" | 10 | 29 | 48.02 | 49 | 700 |
| JZ27015 | 1/2" | 15 | 35 | 82.32 | 84 | 450 |
| JZ27020 | 3/4" | 20 | 38 | 115.64 | 118 | 300 |
| JZ27025 | 1" | 25 | 44 | 178.36 | 182 | 180 |
| JZ27032 | 1 1/4" | 32 | 49 | 263.62 | 269 | 120 |
| JZ27040 | 1 1/2" | 40 | 53 | 338.1 | 345 | 72 |
| JZ27050 | 2" | 50 | 63 | 583.1 | 595 | 48 |
| JZ27065 | 2 1/2" | 65 | 72 | 822.22 | 839 | 32 |
| JZ27080 | 3" | 80 | 77.5 | 1065.26 | 1087 | 24 |
| JZ270100 | 4" | 100 | 91.5 | 1774.78 | 1811 | 10 |
| JZ270150 | 6" | 150 | 118 | 3789.66 | 3867 | 4 |

# Fig.246

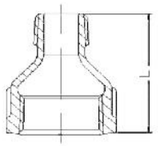


**Socket Reducing, M&F**

| Code | Size | | L | Unit Weight | | Packing |
|---|---|---|---|---|---|---|
| | | | | Black | Galv. | Carton |
| | NPS | DN | mm | g | g | Pcs/ctn |
| JZ2462015 | 3/4" × 1/2" | 20 × 15 | 47 | 93.1 | 95 | 380 |
| JZ2462515 | 1" × 1/2" | 25 × 15 | 54 | 132.3 | 135 | 180 |
| JZ2462520 | 1" × 3/4" | 25 × 20 | 54 | 143.08 | 146 | 180 |
| JZ2463220 | 1 1/4" × 3/4" | 32 × 20 | 59 | 202.86 | 207 | 120 |
| JZ2463225 | 1 1/4" × 1" | 32 × 25 | 59 | 213.64 | 218 | 120 |
| JZ2464020 | 1 1/2" × 3/4" | 40 × 20 | 62 | 252.84 | 258 | 80 |
| JZ2464025 | 1 1/2" × 1" | 40 × 25 | 62 | 266.56 | 272 | 80 |
| JZ2464032 | 1 1/2" × 1 1/4" | 40 × 32 | 62 | 288.12 | 294 | 80 |
| JZ2465025 | 2" × 1" | 50 × 25 | 69 | 397.88 | 406 | 48 |
| JZ2465032 | 2" × 1 1/4" | 50 × 32 | 69 | 425.32 | 434 | 48 |
| JZ2465040 | 2" × 1 1/2" | 50 × 40 | 69 | 429.24 | 438 | 48 |

# Fig.240

**Sockets, Reducing**

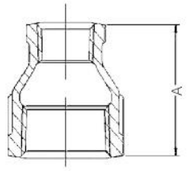


| Code | Size | | A | Unit Weight | | Packing |
|---|---|---|---|---|---|---|
| | | | | Black | Galv. | Carton |
| | NPS | DN | mm | g | g | Pcs/ctn |
| JZ240108 | 3/8" × 1/4" | 10 × 8 | 29 | 42 | 43 | 500 |
| JZ240158 | 1/2" × 1/4" | 15 × 8 | 35 | 66 | 67 | 500 |
| JZ2401510 | 1/2" × 3/8" | 15 × 10 | 36 | 69 | 70 | 500 |
| JZ240208 | 3/4" × 1/4" | 20 × 8 | 38 | 86 | 88 | 360 |
| JZ2402010 | 3/4" × 3/8" | 20 × 10 | 38 | 91 | 93 | 360 |
| JZ2402515 | 3/4" × 1/2" | 20 × 15 | 38 | 105 | 107 | 360 |
| JZ240258 | 3/4" × 1/4" | 25 × 8 | 44 | 132 | 135 | 200 |
| JZ2402510 | 1" × 3/8" | 25 × 10 | 44 | 128 | 131 | 200 |
| JZ2402515 | 1" × 1/2" | 25 × 15 | 44 | 142 | 145 | 200 |
| JZ2402520 | 1" × 3/4" | 25 × 20 | 44 | 150 | 153 | 200 |
| JZ2403215 | 1 1/4" × 1/2" | 32 × 15 | 49 | 203 | 207 | 144 |
| JZ2403220 | 1 1/4" × 3/4" | 32 × 20 | 49 | 214 | 218 | 144 |
| JZ2403225 | 1 1/4" × 1" | 32 × 25 | 49 | 225 | 230 | 120 |
| JZ2404015 | 1 1/2" × 1/2" | 40 × 15 | 53 | 247 | 252 | 140 |
| JZ2404020 | 1 1/2" × 3/4" | 40 × 20 | 53 | 254 | 259 | 140 |
| JZ2404025 | 1 1/2" × 1" | 40 × 25 | 53 | 277 | 283 | 120 |
| JZ2404032 | 1 1/2" × 1 1/4" | 40 × 32 | 53 | 312 | 318 | 100 |
| JZ2405015 | 2" × 1/2" | 50 × 15 | 63 | 392 | 400 | 80 |
| JZ2405020 | 2" × 3/4" | 50 × 20 | 63 | 406 | 414 | 80 |
| JZ2405025 | 2" × 1" | 50 × 25 | 63 | 414 | 422 | 72 |
| JZ2405032 | 2" × 1 1/4" | 50 × 32 | 63 | 435 | 444 | 72 |
| JZ2405040 | 2" × 1 1/2" | 50 × 40 | 63 | 475 | 485 | 48 |
| JZ2406515 | 2 1/2" × 1/2" | 65 × 15 | 72 | 568 | 580 | 60 |
| JZ2406520 | 2 1/2" × 3/4" | 65 × 20 | 72 | 578 | 590 | 60 |
| JZ2406525 | 2 1/2" × 1" | 65 × 25 | 72 | 594 | 606 | 60 |
| JZ2406532 | 2 1/2" × 1 1/4" | 65 × 32 | 72 | 614 | 627 | 60 |
| JZ2406540 | 2 1/2" × 1 1/2" | 65 × 40 | 72 | 634 | 647 | 60 |
| JZ2406550 | 2 1/2" × 2" | 65 × 50 | 72 | 713 | 728 | 40 |
| JZ2408015 | 3" × 1/2" | 80 × 15 | 77.5 | 699 | 713 | 40 |
| JZ2408020 | 3" × 3/4" | 80 × 20 | 77.5 | 735 | 750 | 40 |
| JZ2408025 | 3" × 1" | 80 × 25 | 77.5 | 747 | 762 | 40 |
| JZ2408032 | 3" × 1 1/4" | 80 × 32 | 77.5 | 764 | 780 | 40 |
| JZ2408040 | 3" × 1 1/2" | 80 × 40 | 77.5 | 785 | 801 | 40 |
| JZ2408050 | 3" × 2" | 80 × 50 | 77.5 | 839 | 856 | 36 |
| JZ2408065 | 3" × 2 1/2" | 80 × 65 | 77.5 | 860 | 878 | 24 |
| JZ24010015 | 4" × 1/2" | 100 × 15 | 91.5 | 1139 | 1162 | 20 |
| JZ24010020 | 4" × 3/4" | 100 × 20 | 91.5 | 1223 | 1248 | 20 |
| JZ24010025 | 4" × 1" | 100 × 25 | 91.5 | 1233 | 1258 | 20 |
| JZ24010032 | 4" × 1 1/4" | 100 × 32 | 91.5 | 1279 | 1305 | 20 |
| JZ24010040 | 4" × 1 1/2" | 100 × 40 | 91.5 | 1294 | 1320 | 20 |
| JZ24010050 | 4" × 2" | 100 × 50 | 91.5 | 1326 | 1353 | 16 |
| JZ24010065 | 4" × 2 1/2" | 100 × 65 | 91.5 | 1378 | 1406 | 14 |
| JZ24010080 | 4" × 3" | 100 × 80 | 91.5 | 1438 | 1467 | 12 |
| JZ24015080 | 6" × 4" | 150 × 80 | 118 | | | |





# Fig.529a

**Socket M&F**

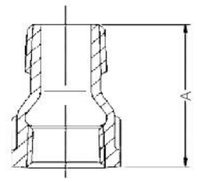


| Code | Size | | A | Unit Weight | | Packing |
|---|---|---|---|---|---|---|
| | | | | Black | Galv. | Carton |
| | NPS | DN | mm | g | g | Pcs/ctn |
| JZ529A15 | 1/2" | 15 | 44 | 56.8 | 58 | 600 |
| JZ529A20 | 3/4" | 20 | 45 | 89.2 | 91 | 380 |
| JZ529A25 | 1" | 25 | 52 | 137.2 | 140 | 180 |
| JZ529A32 | 1 1/4" | 32 | 57 | 198.0 | 202 | 120 |
| JZ529A40 | 1 1/2" | 40 | 60 | 249.9 | 255 | 80 |
| JZ529A50 | 2" | 50 | 66 | 384.2 | 392 | 48 |

# Fig.280

**Hexagon Nipples**

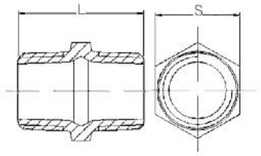


| Code | Size | | L | S | Unit Weight | | Packing |
|---|---|---|---|---|---|---|---|
| | | | | | Black | Galv. | Carton |
| | NPS | DN | mm | mm | g | g | Pcs/ctn |
| JZ2808 | 1/4" | 8 | 36 | 16.7 | 29.4 | 30 | 1000 |
| JZ28010 | 3/8" | 10 | 36 | 19.8 | 30.38 | 31 | 1000 |
| JZ28015 | 1/2" | 15 | 44 | 23.6 | 55.86 | 57 | 600 |
| JZ28020 | 3/4" | 20 | 47 | 29.2 | 84.28 | 86 | 300 |
| JZ28025 | 1" | 25 | 53 | 36 | 134.26 | 137 | 200 |
| JZ28032 | 1 1/4" | 32 | 56 | 45 | 186.2 | 190 | 140 |
| JZ28040 | 1 1/2" | 40 | 58 | 51 | 227.36 | 232 | 104 |
| JZ28050 | 2" | 50 | 68 | 63 | 365.54 | 373 | 56 |
| JZ28065 | 2 1/2" | 65 | 73 | 79.4 | 543.9 | 555 | 36 |
| JZ28080 | 3" | 80 | 81 | 91.6 | 768.32 | 784 | 24 |
| JZ280100 | 4" | 100 | 95 | 117 | 1237.74 | 1263 | 12 |
| JZ280150 | 6" | 150 | 107 | 170 | | | |

# Fig.245

**Nipples, Reducing**

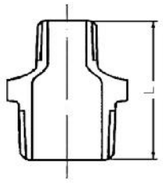


| Code | Size | | Unit Weight | | | | |
|---|---|---|---|---|---|---|---|
| | | | L | S | Black | Galv. | PCS/ |
| | NPS | DN | mm | mm | g | g | CTN. |
| JZ245158 | 1/2" × 1/4" | 15 × 8 | 44 | 22 | 47.04 | 48 | 600 |
| JZ2451510 | 1/2" × 3/8" | 15 × 10 | 44 | 22 | 59.78 | 61 | 600 |
| JZ2452015 | 3/4" × 1/2" | 20 × 15 | 47 | 29.9 | 91.14 | 93 | 400 |
| JZ2452515 | 1" × 1/2" | 25 × 15 | 53 | 35.8 | 115.64 | 118 | 260 |
| JZ2452520 | 1" × 3/4" | 25 × 20 | 53 | 35.8 | 137.2 | 140 | 240 |
| JZ2453215 | 1 1/4" × 1/2" | 32 × 15 | 57 | 45.6 | 177.38 | 181 | 160 |
| JZ2453220 | 1 1/4" × 3/4" | 32 × 20 | 57 | 45.6 | 181.3 | 185 | 140 |
| JZ2453225 | 1 1/4" × 1" | 32 × 25 | 57 | 45.6 | 192.08 | 196 | 140 |
| JZ2454015 | 1 1/2" × 1/2" | 40 × 15 | 59 | 50.5 | 202.86 | 207 | 130 |
| JZ2454020 | 1 1/2" × 3/4" | 40 × 20 | 59 | 50.5 | 207.76 | 212 | 130 |
| JZ2454025 | 1 1/2" × 1" | 40 × 25 | 59 | 50.5 | 225.4 | 230 | 120 |
| JZ2454032 | 1 1/2" × 1 1/4" | 40 × 32 | 59 | 50.5 | 235.2 | 240 | 100 |
| JZ2455015 | 2" × 1/2" | 50 × 15 | 68 | 63.5 | 323.4 | 330 | 75 |
| Zz2455020 | 2" × 3/4" | 50 × 20 | 68 | 63.5 | 334.18 | 341 | 72 |
| JZ2455025 | 2" × 1" | 50 × 25 | 68 | 63.5 | 343 | 350 | 72 |
| JZ2455032 | 2" × 1 1/4" | 50 × 32 | 68 | 63.5 | 352.8 | 360 | 72 |
| JZ2455040 | 2" × 1 1/2" | 50 × 40 | 68 | 63.5 | 366.52 | 374 | 60 |
| JZ2456550 | 2 1/2" × 2" | 65 × 50 | 73 | 79.4 | | | |
| JZ2458050 | 3" × 2" | 80 × 50 | 81 | 91.6 | 749.7 | 765 | 24 |
| JZ2458065 | 3" × 2 1/2" | 80 × 65 | 81 | 91.6 | | | |
| JZ24510050 | 4" × 2" | 100 × 50 | 95 | 117 | | | |
| JZ24510065 | 4" × 2 1/2" | 100 × 65 | 95 | 117 | | | |
| JZ24510080 | 4" × 3" | 100 × 80 | 95 | 117 | | | |

# Fig. 130

**Tee, Equal**

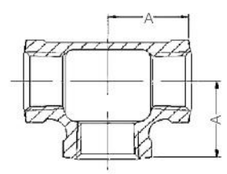


| Code | Size | | A | Unit Weight | | Packing |
|---|---|---|---|---|---|---|
| | | | | Black | Galv. | Carton |
| | NPS | DN | mm | g | g | Pcs/ctn |
| JZ1306 | 1/8" | 6 | 18 | 44.1 | 45 | 400 |
| JZ1308 | 1/4" | 8 | 20 | 63.7 | 65 | 400 |
| JZ13010 | 3/8" | 10 | 24 | 88.2 | 90 | 300 |
| JZ13015 | 1/2" | 15 | 27 | 137.2 | 140 | 240 |
| JZ13020 | 3/4" | 20 | 32 | 198.94 | 203 | 140 |
| JZ13025 | 1" | 25 | 37 | 308.7 | 315 | 90 |
| JZ13032 | 1 1/4" | 32 | 44.5 | 479.22 | 489 | 56 |
| JZ13040 | 1 1/2" | 40 | 48.5 | 600.74 | 613 | 40 |
| JZ13050 | 2" | 50 | 57 | 977.06 | 997 | 20 |
| JZ13065 | 2 1/2" | 65 | 68.5 | 1520.96 | 1552 | 12 |
| JZ13080 | 3" | 80 | 77.5 | 2045.26 | 2087 | 10 |
| JZ130100 | 4" | 100 | 96.5 | 3589.74 | 3663 | 4 |
| JZ130150 | 6" | 150 | 129 | 8157.52 | 8324 | 2 |





# Fig.130R

**Tee, Reducing**

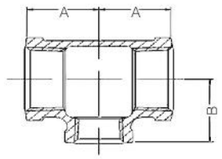


| Code | Size | | A | B | Unit Weight | | Packing |
|---|---|---|---|---|---|---|---|
| | | | | | Black | Galv. | Carton |
| | NPS | DN | mm | mm | g | g | Pcs/ctn |
| JZ130R1510 | 1/2" × 3/8" | 15 × 10 | 25 | 25 | / | / | / |
| JZ130R2015 | 3/4" × 1/2" | 20 × 15 | 29 | 30 | 180.32 | 184 | 150 |
| JZ130R2510 | 1" × 3/8" | 25 × 10 | 29 | 31 | 225.4 | 230 | 100 |
| JZ130R2515 | 1" × 1/2" | 25 × 15 | 31 | 33 | 238.14 | 243 | 100 |
| JZ130R2520 | 1" × 3/4" | 25 × 20 | 34 | 35 | 261.66 | 267 | 100 |
| JZ130R3210 | 1 1/4" × 3/8" | 32 × 10 | 31 | 36 | 309.68 | 316 | 64 |
| JZ130R3215 | 1 1/4" × 1/2" | 32 × 15 | 34 | 37 | 341.04 | 348 | 64 |
| JZ130R3220 | 1 1/4" × 3/4" | 32 × 20 | 36 | 40 | 371.42 | 379 | 64 |
| JZ130R3225 | 1 1/4" × 1" | 32 × 25 | 40 | 41 | 407.68 | 416 | 64 |
| JZ130R4015 | 1 1/2" × 1/2" | 40 × 15 | 35 | 41 | 406.7 | 415 | 52 |
| JZ130R4020 | 1 1/2" × 3/4" | 40 × 20 | 37 | 43 | 427.28 | 436 | 52 |
| JZ130R4025 | 1 1/2" × 1" | 40 × 25 | 41 | 45 | 481.18 | 491 | 42 |
| JZ130R4032 | 1 1/2" × 1 1/4" | 40 × 32 | 45 | 47 | 557.62 | 569 | 42 |
| JZ130R5015 | 2" × 1/2" | 50 × 15 | 37 | 47 | 589.96 | 602 | 40 |
| JZ130R5020 | 2" × 3/4" | 50 × 20 | 40 | 49 | 642.88 | 656 | 40 |
| JZ130R5025 | 2" × 1" | 50 × 25 | 43 | 51 | 687.96 | 702 | 30 |
| JZ130R5032 | 2" × 1 1/4" | 50 × 32 | 47 | 53 | 750.68 | 766 | 30 |
| JZ130R5040 | 2" × 1 1/2" | 50 × 40 | 51 | 54 | 826.14 | 843 | 24 |
| JZ130R6515 | 2 1/2" × 1/2" | 65 × 15 | 40.5 | 56 | 887.88 | 906 | 24 |
| JZ130R6520 | 2 1/2" × 3/4" | 65 × 20 | 43.5 | 57 | 919.24 | 938 | 24 |
| JZ130R6525 | 2 1/2" × 1" | 65 × 25 | 47.5 | 59 | 1017.24 | 1038 | 20 |
| JZ130R6532 | 2 1/2" × 1 1/4" | 65 × 32 | 51.5 | 61 | 1075.06 | 1097 | 16 |
| JZ130R6540 | 2 1/2" × 1 1/2" | 65 × 40 | 54.5 | 61 | 1145.62 | 1169 | 16 |
| JZ130R6550 | 2 1/2" × 2" | 65 × 50 | 59.5 | 64 | 1294.58 | 1321 | 16 |
| JZ130R8015 | 3" × 1/2" | 80 × 15 | 42.5 | 64 | 1114.26 | 1137 | 12 |
| JZ130R8020 | 3" × 3/4" | 80 × 20 | 45.5 | 65 | 1174.04 | 1198 | 12 |
| JZ130R8025 | 3" × 1" | 80 × 25 | 49.5 | 67 | 1267.14 | 1293 | 12 |
| JZ130R8032 | 3" × 1 1/4" | 80 × 32 | 54.5 | 69 | 1342.6 | 1370 | 12 |
| JZ130R8040 | 3" × 1 1/2" | 80 × 40 | 57.5 | 71 | 1440.6 | 1470 | 12 |
| JZ130R8050 | 3" × 2" | 80 × 50 | 61.5 | 71 | 1589.56 | 1622 | 10 |
| JZ130R8065 | 3" × 2 1/2" | 80 × 65 | 71.5 | 74 | 1862 | 1900 | 10 |
| 1Z130R10015 | 4" × 1/2" | 100 × 15 | 49.5 | 78 | 1915.9 | 1955 | 8 |
| JZ130R10020 | 4" × 3/4" | 100 × 20 | 53.5 | 79 | 2038.4 | 2080 | 8 |
| JZ130R10025 | 4" × 1" | 100 × 25 | 56.5 | 82 | 2100.14 | 2143 | 8 |
| JZ130R10032 | 4" × 1 1/4" | 100 × 32 | 60.5 | 85 | 2214.8 | 2260 | 6 |
| JZ130R10040 | 4" × 1 1/2" | 100 × 40 | 62.5 | 85 | 2303.98 | 2351 | 6 |
| JZ130R10050 | 4" × 2" | 100 × 50 | 68.5 | 86 | 2558.78 | 2611 | 6 |
| JZ130R10065 | 4" × 2 1/2" | 100 × 65 | 77.5 | 89 | 2799.86 | 2857 | 6 |
| JZ130R10080 | 4" × 3" | 100 × 80 | 82.5 | 90 | 3138.94 | 3203 | 6 |

# Fig.131R

**Tees Reducing**

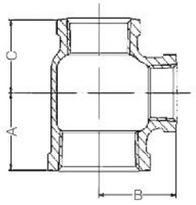


| Code | Size | | A | B | C | Unit Weight | | Packing |
|---|---|---|---|---|---|---|---|---|
| | | | | | | Black | Galv. | Carton |
| | NPS | DN | mm | mm | mm | g | g | Pcs/ctn |
| JZ131R201515 | 3/4" × 1/2" × 1/2" | 20 × 15 × 15 | 29 | 30 | 27 | 159.74 | 163 | 120 |
| JZ131R251520 | 1" × 1/2" × 3/4" | 25 × 15 × 20 | 31 | 33 | 29 | 191.1 | 195 | 120 |
| JZ131R252020 | 1" × 3/4" × 3/4" | 25 × 20 × 20 | 34 | 35 | 32 | 157.78 | 161 | 120 |
| JZ131R321525 | 1 1/4" × 1/2" × 1" | 32 × 15 × 25 | 33 | 37 | 31 | 234.22 | 239 | 80 |
| JZ131R322025 | 1 1/4" × 3/4" × 1" | 32 × 20 × 25 | 36 | 40 | 34 | 287.14 | 293 | 60 |
| JZ131R322525 | 1 1/4" × 1" × 1" | 32 × 25 × 25 | 39 | 40 | 36 | 355.74 | 363 | 60 |
| JZ131R323225 | 1 1/4" × 1 1/4" × 1" | 32 × 32 × 25 | 44.5 | 44.5 | 41 | 406.7 | 415 | 40 |
| JZ131R401532 | 1 1/2" × 1/2" × 1 1/4" | 40 × 15 × 32 | 35 | 41 | 33 | 539.98 | 551 | 32 |
| JZ131R402032 | 1 1/2" × 3/4" × 1 1/4" | 40 × 20 × 32 | 37 | 43 | 36 | 514.5 | 525 | 36 |
| JZ131R402525 | 1 1/2" × 1" × 1" | 40 × 25 × 25 | 40 | 44 | 36 | 641.9 | 655 | 28 |
| JZ131R402532 | 1 1/2" × 1" × 1 1/4" | 40 × 25 × 32 | 41 | 45 | 40 | 711.48 | 726 | 20 |
| JZ131R403225 | 1 1/2" × 1 1/4" × 1" | 40 × 32 × 25 | 45 | 47 | 41 | 879.06 | 897 | 16 |
| JZ131R403232 | 1 1/2" × 1 1/4" × 1 1/2" | 40 × 32 × 32 | 45 | 47 | 44.5 | 1056.44 | 1078 | 12 |
| JZ131R404025 | 1 1/2" × 1 1/2" × 1" | 40 × 40 × 25 | 48.5 | 48.5 | 45 | 1025.08 | 1046 | 16 |
| JZ131R405032 | 1 1/2" × 2" × 1 1/4" | 40 × 50 × 32 | 54 | 51 | 53 | 1336.72 | 1364 | 10 |
| JZ131R501540 | 2" × 1/2" × 1 1/2" | 50 × 15 × 40 | 37 | 47 | 35 | 1622.88 | 1656 | 10 |
| JZ131R502040 | 2" × 3/4" × 1 1/2" | 50 × 20 × 40 | 40 | 49 | 37 | 2530.36 | 2582 | 6 |
| JZ131R502532 | 2" × 1" × 1 1/4" | 50 × 25 × 32 | 43 | 51 | 40 | 299.88 | 306 | 64 |
| JZ131R502540 | 2" × 1" × 1 1/2" | 50 × 25 × 40 | 42 | 49 | 40 | 344.96 | 352 | 68 |
| JZ131R503232 | 2" × 1 1/4" × 1 1/4" | 50 × 32 × 32 | 47 | 53 | 44.5 | 392 | 400 | 60 |
| JZ131R503240 | 2" × 1 1/4" × 1 1/2" | 50 × 32 × 40 | 47 | 53 | 45 | 491.96 | 502 | 40 |
| JZ131R504025 | 2" × 1 1/2" × 1" | 50 × 40 × 25 | 51 | 54 | 45 | 377.3 | 385 | 42 |
| JZ131R504040 | 2" × 1 1/2" × 1 1/2" | 50 × 40 × 40 | 51 | 54 | 48.5 | 406.7 | 415 | 40 |
| JZ131R505025 | 2" × 2" × 1" | 50 × 50 × 25 | 57 | 57 | 51 | 451.78 | 461 | 40 |
| JZ131R651550 | 2 1/2" × 1/2" × 2" | 65 × 15 × 50 | 40.5 | 56 | 37 | 534.1 | 545 | 36 |
| JZ131R652050 | 2 1/2" × 3/4" × 2" | 65 × 20 × 50 | 43.5 | 57 | 40 | 620.34 | 633 | 30 |
| JZ131R652550 | 2 1/2" × 1" × 2" | 65 × 25 × 50 | 45 | 58 | 42 | 702.66 | 717 | 24 |
| JZ131R653240 | 2 1/2" × 1 1/4" × 1 1/2" | 65 × 32 × 40 | 51.5 | 61 | 45 | 599.76 | 612 | 30 |
| JZ131R653250 | 2 1/2" × 1 1/4" × 2" | 65 × 32 × 50 | 51.5 | 61 | 47 | 673.26 | 687 | 30 |
| JZ131R654050 | 2 1/2" × 1 1/2" × 2" | 65 × 40 × 50 | 54.5 | 62 | 51 | 525.28 | 536 | 36 |
| JZ131R655050 | 2 1/2" × 2" × 2" | 65 × 50 × 50 | 59.5 | 64 | 57 | 525.28 | 536 | 36 |
| JZ131R802565 | 3" × 1" × 2 1/2" | 80 × 25 × 65 | 49.5 | 67 | 47.5 | 525.28 | 536 | 36 |
| JZ131R803265 | 3" × 1 1/4" × 2 1/2" | 80 × 32 × 65 | 54.5 | 69 | 51.5 | 552.72 | 564 | 24 |
| JZ131R804065 | 3" × 1 1/2" × 2 1/2" | 80 × 40 × 65 | 57.5 | 71 | 54.5 | 562.52 | 574 | 24 |
| JZ131R805065 | 3" × 2" × 2 1/2" | 80 × 50 × 65 | 61.5 | 71 | 59.5 | 705.6 | 720 | 16 |
| JZ131R806565 | 3" × 2 1/2" × 2 1/2" | 80 × 65 × 65 | 71.5 | 74 | 68.5 | 754.6 | 770 | 16 |





# Fig.165

**Lateral Y Branch 45° Tee**

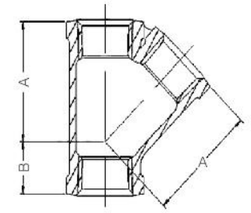


| Code | Size | | A | B | Unit Weight | | Packing |
|---|---|---|---|---|---|---|---|
| | | | | | Black | Galv. | Carton |
| | NPS | DN | mm | mm | g | g | Pcs/ctn |
| JZ16515 | 1/2" | 15 | 42 | 18 | 161.7 | 165 | 240 |
| JZ16520 | 3/4" | 20 | 51.5 | 18.5 | 244.02 | 249 | 100 |
| JZ16525 | 1" | 25 | 62 | 23 | 375.34 | 383 | 80 |
| JZ16532 | 1 1/4" | 32 | 75 | 28 | 595.84 | 608 | 40 |
| JZ16540 | 1 1/2" | 40 | 82 | 30 | 743.82 | 759 | 30 |
| JZ16550 | 2" | 50 | 100.5 | 32.5 | 1189.72 | 1214 | 16 |
| JZ16565 | 2 1/2" | 65 | 125 | 39 | 1935.5 | 1975 | 10 |
| JZ16580 | 3" | 80 | 140 | 45 | 2651.88 | 2706 | 8 |
| JZ165100 | 4" | 100 | 180 | 55 | 4817.68 | 4916 | 2 |

# Fig.180

**Crosshead Female**

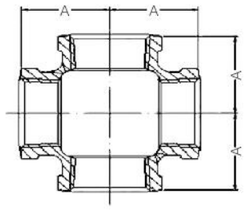


| Code | Size | | A | Unit Weight | | Packing |
|---|---|---|---|---|---|---|
| | | | | Black | Galv. | Carton |
| | NPS | DN | mm | g | g | Pcs/ctn |
| JZ18015 | 1/2" | 15 | 27 | 167 | 170 | 180 |
| JZ18020 | 3/4" | 20 | 32 | 246 | 251 | 96 |
| JZ18025 | 1" | 25 | 37 | 380 | 388 | 72 |
| JZ18032 | 1 1/4" | 32 | 44.5 | 576 | 588 | 36 |
| JZ18040 | 1 1/2" | 40 | 48.5 | 712 | 727 | 30 |
| JZ18050 | 2" | 50 | 57 | 1147 | 1170 | 12 |
| JZ18065 | 2 1/2" | 65 | 68.5 | 1740 | 1776 | 10 |
| JZ18080 | 3" | 80 | 77.5 | 2478 | 2529 | 6 |
| JZ180100 | 4" | 100 | 96.5 | 4211 | 4297 | 2 |

# Fig.180R

**Crosses, Reducing**

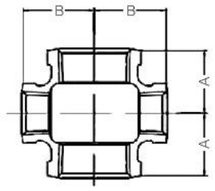


| Code | Size | | A | B | UnitWeight | | Packing |
|---|---|---|---|---|---|---|---|
| | | | | | Black | Galv. | Carton |
| | NPS | DN | mm | mm | g | g | Pcs/ctn |
| JZ180R2015 | 3/4" × 1/2" | 20 × 15 | 29 | 30 | 199 | 203 | 120 |
| JZ180R2515 | 1" × 1/2" | 25 × 15 | 31 | 33 | 261 | 266 | 96 |
| JZ180R2520 | 1" × 3/4" | 25 × 20 | 34 | 35 | 310 | 316 | 80 |
| JZ180R3215 | 1 1/4" × 1/2" | 32 × 15 | 34 | 37 | 365 | 372 | 64 |
| JZ180R3220 | 1 1/4" × 3/4" | 32 × 20 | 36 | 40 | 407 | 415 | 60 |
| JZ180R3225 | 1 1/4" × 1" | 32 × 25 | 40 | 41 | 460 | 469 | 56 |
| JZ180R4015 | 1 1/2" × 1/2" | 40 × 15 | 35 | 41 | 414 | 422 | 52 |
| JZ180R4020 | 1 1/2" × 3/4" | 40 × 20 | 37 | 43 | 473 | 483 | 52 |
| JZ180R4025 | 1 1/2" × 1" | 40 × 25 | 41 | 45 | 522 | 533 | 42 |
| JZ180R4032 | 1 1/2" × 1 1/4" | 40 × 32 | 45 | 47 | 646 | 659 | 34 |
| JZ180R5015 | 2" × 1/2" | 50 × 15 | 37 | 47 | 616 | 629 | 36 |
| JZ180R5020 | 2" × 3/4" | 50 × 20 | 40 | 49 | 674 | 688 | 36 |
| JZ180R5025 | 2" × 1" | 50 × 25 | 43 | 51 | 743 | 758 | 28 |
| JZ180R5032 | 2" × 1 1/4" | 50 × 32 | 47 | 53 | 832 | 849 | 28 |
| JZ180R5040 | 2" × 1 1/2" | 50 × 40 | 51 | 54 | 901 | 919 | 20 |
| JZ180R6515 | 2 1/2" × 1/2" | 65 × 15 | 40.5 | 56 | 878 | 896 | 20 |
| JZ180R6520 | 2 1/2" × 3/4" | 65 × 20 | 43.5 | 57 | 950 | 969 | 20 |
| JZ180R6525 | 2 1/2" × 1" | 65 × 25 | 47.5 | 59 | 1035 | 1056 | 18 |
| JZ180R6532 | 2 1/2" × 1 1/4" | 65 × 32 | 51.5 | 61 | 1174 | 1198 | 16 |
| JZ180R6540 | 2 1/2" × 1 1/2" | 65 × 40 | 54.5 | 61 | 1201 | 1225 | 14 |
| JZ180R6550 | 2 1/2" × 2' | 65 × 50 | 59.5 | 64 | 1438 | 1467 | 10 |
| JZ180R8015 | 3" × 1/2" | 80 × 15 | 42.5 | 64 | 1107 | 1130 | 12 |
| JZ180R8020 | 3" × 3/4" | 80 × 20 | 45.5 | 65 | 1155 | 1179 | 12 |
| JZ180R8025 | 3" × 1" | 80 × 25 | 49.5 | 67 | 1290 | 1316 | 12 |
| JZ180R8032 | 3" × 1 1/4" | 80 × 32 | 54.5 | 69 | 1438 | 1467 | 12 |
| JZ180R8040 | 3" × 1 1/2" | 80 × 40 | 57.5 | 71 | 1560 | 1592 | 10 |
| JZ180R8050 | 3" × 2" | 80 × 50 | 61.5 | 71 | 1695 | 1730 | 10 |
| JZ180R8065 | 3" × 2 1/2" | 80 × 65 | 71.5 | 74 | 1981 | 2021 | 8 |
| JZ180R10015 | 4" × 1/2" | 100 × 15 | 49.5 | 78 | 1826 | 1863 | 6 |
| JZ180R10020 | 4" × 3/4" | 100 × 20 | 53.5 | 79 | 1886 | 1924 | 6 |
| JZ180R10025 | 4" × 1" | 100 × 25 | 56.5 | 82 | 2025 | 2066 | 6 |
| JZ180R10032 | 4" × 1 1/4" | 100 × 32 | 60.5 | 85 | 2264 | 2310 | 6 |
| JZ180R10040 | 4" × 1 1/2" | 100 × 40 | 62.5 | 85 | 2288 | 2335 | 4 |
| JZ180R10050 | 4" × 2" | 100 × 50 | 68.5 | 86 | 2529 | 2581 | 4 |
| JZ180R10065 | 4" × 2 1/2" | 100 × 65 | 77.5 | 89 | 2819 | 2877 | 4 |
| JZ180R10080 | 4" × 3" | 100 × 80 | 82.5 | 90 | 3177 | 3242 | 4 |





# Fig.330

**Union, Flat Seat**

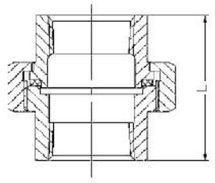


| Code | Size | | A | UnitWeight | | Packing |
|---|---|---|---|---|---|---|
| | | | | Black | Galv. | Carton |
| | NPS | DN | mm | g | g | Pcs/ctn |
| JZ33010 | 3/8" | 10 | 39 | 156.8 | 160 | 280 |
| JZ33015 | 1/2" | 15 | 46 | 200.9 | 205 | 180 |
| JZ33020 | 3/4" | 20 | 50 | 265.58 | 271 | 120 |
| JZ33025 | 1" | 25 | 56 | 392 | 400 | 88 |
| JZ33032 | 1 1/4" | 32 | 63 | 583.1 | 595 | 56 |
| JZ33040 | 1 1/2" | 40 | 68 | 733.04 | 748 | 36 |
| JZ33050 | 2" | 50 | 76 | 1056.44 | 1078 | 28 |
| JZ33065 | 2 1/2" | 65 | 83 | 1675.8 | 1710 | 12 |
| JZ33080 | 3" | 80 | 93 | 2175.6 | 2220 | 10 |
| JZ330100 | 4" | 100 | 113.5 | 3724 | 3800 | 6 |

# Fig.331

**Union, Flat Seat, M&F**

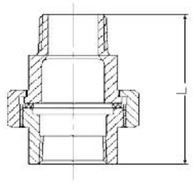


| Code | Size | | L | UnitWeight | | Packing |
|---|---|---|---|---|---|---|
| | | | | Black | Galv. | Carton |
| | NPS | DN | mm | g | g | Pcs/ctn |
| JZ33115 | 1/2" | 15 | 64 | 219.52 | 224 | 140 |
| JZ33120 | 3/4" | 20 | 70 | 275.38 | 281 | 120 |
| JZ33125 | 1" | 25 | 78 | 423.36 | 432 | 80 |
| JZ33132 | 1 1/4" | 32 | 88 | 661.5 | 675 | 40 |
| JZ33140 | 1 1/2" | 40 | 93 | 784 | 800 | 32 |
| JZ33150 | 2" | 50 | 104 | 1200.5 | 1225 | 20 |

# Fig.340

**Union, Taper Seat**

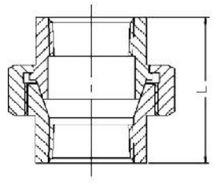


| Code | Size | | L | Unit Weight | | Packing |
|---|---|---|---|---|---|---|
| | | | | Black | Galv. | Carton |
| | NPS | DN | mm | g | g | Pcs/ctn |
| JZ3408 | 1/4" | 8 | 42 | 103.88 | 106 | 200 |
| JZ34010 | 3/8" | 10 | 45 | 152.88 | 156 | 200 |
| JZ34015 | 1/2" | 15 | 47 | 164.64 | 168 | 180 |
| JZ34020 | 3/4" | 20 | 51.5 | 251.86 | 257 | 120 |
| JZ34025 | 1" | 25 | 57 | 330.26 | 337 | 88 |
| JZ34032 | 1 1/4" | 32 | 65 | 560.56 | 572 | 56 |
| JZ34040 | 1 1/2" | 40 | 71 | 703.64 | 718 | 36 |
| JZ34050 | 2" | 50 | 79 | 1023.12 | 1044 | 28 |
| JZ34065 | 2 1/2" | 65 | 85.5 | 1615.04 | 1648 | 12 |
| JZ34080 | 3" | 80 | 94.5 | 2242.24 | 2288 | 10 |
| JZ340100 | 4" | 100 | 110.5 | 3615.22 | 3689 | 6 |

# Fig.341

**Union, Taper Seat, M&F**

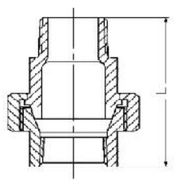


| Code | Size | | L | Unit Weight | | Packing |
|---|---|---|---|---|---|---|
| | | | | Black | Galv. | Carton |
| | NPS | DN | mm | g | g | Pcs/ctn |
| JZ34115 | 1/2" | 15 | 65 | 196 | 200 | 140 |
| JZ34120 | 3/4" | 20 | 71.5 | 289.1 | 295 | 120 |
| JZ34125 | 1" | 25 | 79 | 392 | 400 | 80 |
| JZ34132 | 1 1/4" | 32 | 90 | 635.04 | 648 | 40 |
| JZ34140 | 1 1/2" | 40 | 96 | 801.64 | 818 | 32 |
| JZ34150 | 2" | 50 | 107 | 1149.54 | 1173 | 20 |





# Fig.342

**Brass Unions, Taper Seat**

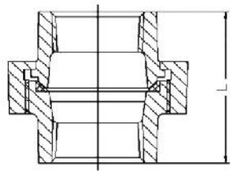


| Code | Size | | L | Unit Weight | | Packing |
|---|---|---|---|---|---|---|
| | | | | Black | Galv. | Carton |
| | NPS | DN | mm | g | g | Pcs/ctn |
| JZ3428 | 1/4" | 8 | 42 | 104.86 | 107 | 200 |
| JZ34210 | 3/8" | 10 | 45 | 143.08 | 146 | 200 |
| JZ34215 | 1/2" | 15 | 47 | 168.56 | 172 | 180 |
| JZ34220 | 3/4" | 20 | 51 | 256.76 | 262 | 120 |
| JZ34225 | 1" | 25 | 56.5 | 333.2 | 340 | 88 |
| JZ34232 | 1 1/4" | 32 | 64 | 583.1 | 595 | 56 |
| JZ34240 | 1 1/2" | 40 | 70 | 731.08 | 746 | 36 |
| JZ34250 | 2" | 50 | 78.5 | 1058.4 | 1080 | 28 |
| JZ34265 | 2 1/2" | 65 | 84.5 | 1804.18 | 1841 | 12 |
| JZ34280 | 3" | 80 | 94 | 2314.76 | 2362 | 10 |
| JZ342100 | 4" | 100 | 110 | 3731.84 | 3808 | 6 |

# Fig.331

**Union, Flat Seat, M&F**

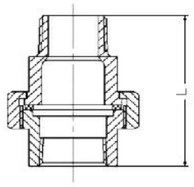


| Code | Size | | L | Unit Weight | | Packing |
|---|---|---|---|---|---|---|
| | | | | Black | Galv. | Carton |
| | NPS | DN | mm | g | g | Pcs/ctn |
| JZ34115 | 1/2" | 15 | 65 | 196 | 200 | 140 |
| JZ34120 | 3/4" | 20 | 71.5 | 289.1 | 295 | 120 |
| JZ34125 | 1" | 25 | 79 | 392 | 400 | 80 |
| JZ34132 | 1 1/4" | 32 | 90 | 635.04 | 648 | 40 |
| JZ34140 | 1 1/2" | 40 | 96 | 801.64 | 818 | 32 |
| JZ34150 | 2" | 50 | 107 | 1149.54 | 1173 | 20 |

# Fig.95

**Union Elbow Falt Seat FF**

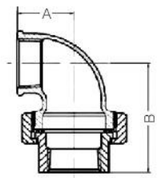


| Code | Size | | A | B | Unit Weight | | Packing |
|---|---|---|---|---|---|---|---|
| | | | | | Black | Galv. | Carton |
| | NPS | DN | mm | mm | g | g | Pcs/ctn |
| JZ9515 | 1/2" | 15 | 24.5 | 54 | 194.04 | 198 | 60 |
| JZ9520 | 3/4" | 20 | 29 | 60 | 303.8 | 310 | 40 |
| JZ9525 | 1" | 25 | 35 | 68 | 471.38 | 481 | 30 |
| JZ9532 | 1 1/4" | 32 | 42 | 80 | 703.64 | 718 | 20 |
| JZ9540 | 1 1/2" | 40 | 45.5 | 86 | 873.18 | 891 | 18 |
| JZ9550 | 2" | 50 | 53.5 | 97 | 1327.9 | 1355 | 10 |

# Fig.97

**Union, Taper Seat, M&F**

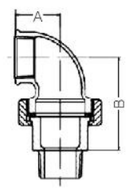


| Code | Size | | A | B | Unit Weight | | Packing |
|---|---|---|---|---|---|---|---|
| | | | | | Black | Galv. | Carton |
| | NPS | DN | mm | mm | g | g | Pcs/ctn |
| JZ9715 | 1/2" | 15 | 24.5 | 72 | 220.5 | 225 | 60 |
| JZ9720 | 3/4" | 20 | 29 | 80 | 328.3 | 335 | 40 |
| JZ9725 | 1" | 25 | 35 | 90 | 517.44 | 528 | 30 |
| JZ9732 | 1 1/4" | 32 | 42 | 105 | 770.28 | 786 | 20 |
| JZ9740 | 1 1/2" | 40 | 45.5 | 111 | 969.22 | 989 | 16 |
| JZ9750 | 2" | 50 | 53.5 | 125 | 1473.92 | 1504 | 10 |





# Fig.241

**Bushings**

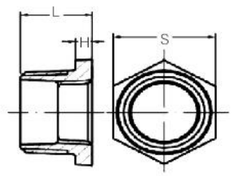


| Code | Size | | L | S | H | Unit Weight | | Packing |
|---|---|---|---|---|---|---|---|---|
| | | | | | | Black | Galv. | Carton |
| | NPS | DN | mm | mm | mm | g | g | Pcs/ctn |
| JZ24186 | 1/4" × 1/8" | 8 × 6 | 18.5 | 16.8 | 6 | 14.7 | 15 | 1800 |
| JZ241106 | 3/8" × 1/8" | 10 × 6 | 18 | 20 | 6 | 22.54 | 23 | 1500 |
| JZ241108 | 3/8" × 1/4" | 10 × 8 | 18.5 | 18.4 | 6 | 18.62 | 19 | 1800 |
| JZ241158 | 3/4" × 3/8" | 15 × 8 | 22.5 | 22 | 6 | 61.74 | 63 | 500 |
| JZ2411510 | 3/4" × 1/4" | 15 × 10 | 22.5 | 22 | 6 | 66.64 | 68 | 600 |
| JZ241208 | 1/2" × 3/8" | 20 × 8 | 24.5 | 29.6 | 6 | 32.34 | 33 | 960 |
| JZ2412010 | 1/2" × 1/4" | 20 × 10 | 24.5 | 29.6 | 6 | 38.22 | 39 | 900 |
| JZ2412015 | 3/4" × 1/2" | 20 × 15 | 24.5 | 29.6 | 6 | 50.96 | 52 | 600 |
| JZ241258 | 1" × 1/4" | 25 × 8 | 28 | 37.4 | 6.5 | 105.84 | 108 | 300 |
| JZ2412510 | 1" × 3/8" | 25 × 10 | 28 | 37.4 | 6.5 | 111.72 | 114 | 300 |
| JZ2412515 | 1" × 1/2" | 25 × 15 | 28 | 37.4 | 6.5 | 97.02 | 99 | 300 |
| JZ2412520 | 1" × 3/4" | 25 × 20 | 28 | 37.4 | 6.5 | 81.34 | 83 | 300 |
| JZ2413215 | 1 1/4" × 1/2" | 32 × 15 | 30 | 45.6 | 7 | 167.58 | 171 | 200 |
| JZ2413220 | 1 1/4" × 3/4" | 32 × 20 | 30 | 45.6 | 7 | 151.9 | 155 | 200 |
| JZ2413225 | 1 1/4" × 1" | 32 × 25 | 30 | 45.6 | 7 | 126.42 | 129 | 200 |
| JZ2414015 | 1 1/2" × 1/2" | 40 × 15 | 30 | 50 | 7.5 | 197.96 | 202 | 160 |
| JZ2414020 | 1 1/2" × 3/4" | 40 × 20 | 30 | 50 | 7.5 | 207.76 | 212 | 160 |
| JZ2414025 | 1 1/2" × 1" | 40 × 25 | 30 | 50 | 7.5 | 182.28 | 186 | 160 |
| JZ2414032 | 1 1/2" × 1 1/4" | 40 × 32 | 30 | 50 | 7.5 | 123.48 | 126 | 160 |
| JZ2415015 | 2" × 1/2" | 50 × 15 | 33 | 64.1 | 8.5 | 289.1 | 295 | 96 |
| JZ2415020 | 2" × 3/4" | 50 × 20 | 33 | 64.1 | 8.5 | 298.9 | 305 | 96 |
| JZ2415025 | 2" × 1" | 50 × 25 | 33 | 64.1 | 8.5 | 342.02 | 349 | 96 |
| JZ2415032 | 2" × 1 1/4" | 50 × 32 | 33 | 64.1 | 8.5 | 302.82 | 309 | 96 |
| JZ2415040 | 2" × 1 1/2" | 50 × 40 | 33 | 64.1 | 8.5 | 255.78 | 26] | 96 |
| JZ2416515 | 2 1/2" × 1/2" | 65 × 15 | 39 | 79.6 | 9 | 441 | 450 | 68 |
| JZ2416520 | 2 1/2" × 3/4" | 65 × 20 | 39 | 79.6 | 9 | 456.68 | 466 | 68 |
| JZ2416525 | 2 1/2" × 1" | 65 × 25 | 39 | 79.6 | 9 | 448.84 | 458 | 68 |
| JZ2416532 | 2 1/2" × 1 1/4" | 65 × 32 | 39 | 79.6 | 9 | 512.54 | 523 | 68 |
| JZ2416540 | 2 1/2" × 1 1/2" | 65 × 40 | 39 | 79.6 | 9 | 519.4 | 530 | 68 |
| JZ2416550 | 2 1/2" × 2" | 65 × 50 | 39 | 79.6 | 9 | 446.88 | 456 | 68 |
| JZ2418015 | 3" × 1/2" | 80 × 15 | 42 | 93 | 10 | 633.08 | 646 | 36 |
| JZ2418020 | 3" × 3/4" | 80 × 20 | 42 | 93 | 10 | 632.1 | 645 | 36 |
| JZ2418025 | 3" × 1" | 80 × 25 | 42 | 93 | 10 | 650.72 | 664 | 36 |
| JZ2418032 | 3" × 1 1/4" | 80 × 32 | 42 | 93 | 10 | 637.98 | 651 | 36 |
| JZ2418040 | 3" × 1 1/2" | 80 × 40 | 42 | 93 | 10 | 694.82 | 709 | 36 |
| JZ2418050 | 3" × 2" | 80 × 50 | 42 | 93 | 10 | 773.22 | 789 | 36 |
| JZ2418065 | 3" × 2 1/2" | 80 × 65 | 42 | 93 | 10 | 556.64 | 568 | 36 |
| JZ24110015 | 4" × 1/2" | 100 × 15 | 49 | 118.4 | 11 | 1070.16 | 1092 | 18 |
| JZ24110020 | 4" × 3/4" | 100 × 20 | 49 | 118.4 | 11 | 1085.84 | 1108 | 18 |
| JZ24110025 | 4" × 1" | 100 × 25 | 49 | 118.4 | 11 | 1078.98 | 1101 | 18 |
| JZ24110032 | 4" × 1 1/4" | 100 × 32 | 49 | 118.4 | 11 | 1126.02 | 1149 | 18 |
| JZ24110040 | 4" × 1 1/2" | 100 × 40 | 49 | 118.4 | 11 | 1097.6 | 1120 | 18 |
| JZ24110050 | 4" × 2" | 100 × 50 | 49 | 118.4 | 11 | 1121.12 | 1144 | 18 |
| JZ24110065 | 4" × 2 1/2" | 100 × 65 | 49 | 118.4 | 11 | 1350.44 | 1378 | 18 |
| JZ24110080 | 4" × 3" | 100 × 80 | 49 | 118.4 | 11 | 1203.44 | 1228 | 18 |
| JZ24115080 | 6" × 3" | 150 × 80 | 60 | 170.8 | 13 | | | |
| JZ241150100 | 6" × 4" | 150 × 100 | 60 | 170.8 | 13 | | | |

# Fig.290

**Beaded Plug**

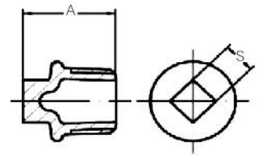


| Code | Size | | A | S | Unit Weight | | Packing |
|---|---|---|---|---|---|---|---|
| | | | | | Black | Galv. | Carton |
| | NPS | DN | mm | mm | g | g | Pcs/ctn |
| JZ2908 | 1/4" | 8 | 22.5 | 6 | 17.64 | 18 | 2000 |
| JZ29010 | 3/8" | 10 | 25 | 7 | 29.4 | 30 | 1300 |
| JZ29015 | 1/2" | 15 | 28 | 10 | 35.28 | 36 | 900 |
| JZ29020 | 3/4" | 20 | 32 | 12 | 55.86 | 57 | 600 |
| JZ29025 | 1" | 25 | 36 | 16 | 93.1 | 95 | 300 |
| JZ29032 | 1 1/4" | 32 | 38.5 | 20 | 148.96 | 152 | 220 |
| JZ29040 | 1 1/2" | 40 | 41 | 22 | 177.38 | 181 | 150 |
| JZ29050 | 2" | 50 | 47 | 28 | 293.02 | 299 | 80 |
| JZ29065 | 2 1/2" | 65 | 53 | 30 | 512.54 | 523 | 64 |
| JZ29080 | 3" | 80 | 58 | 34 | 748.72 | 764 | 36 |
| JZ290100 | 4" | 100 | 72 | 44 | 1097.6 | 1120 | 28 |

# Fig.291

**Plain Plug**

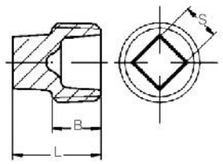


| Code | Size | | L | B | S | Unit Weight | | Packing |
|---|---|---|---|---|---|---|---|---|
| | | | | | | Black | Galv. | Carton |
| | NPS | DN | mm | mm | mm | g | g | Pcs/ctn |
| JZ2918 | 1/4" | 8 | 15.5 | 10 | 6 | 8.82 | 9 | 2400 |
| JZ29110 | 3/8" | 10 | 17 | 10 | 7 | 15.68 | 16 | 2200 |
| JZ29115 | 1/2" | 15 | 22.5 | 13 | 10 | 24.5 | 25 | 1400 |
| JZ29120 | 3/4" | 20 | 24 | 14 | 12 | 36.26 | 37 | 800 |
| JZ29125 | 1" | 25 | 27 | 16.5 | 15 | 57.82 | 59 | 500 |
| JZ29132 | 1 1/4" | 32 | 30 | 20 | 18 | 103.88 | 106 | 300 |
| JZ29140 | 1 1/2" | 40 | 31 | 21 | 22 | 140.14 | 143 | 200 |
| JZ29150 | 2" | 50 | 36 | 25 | 26 | 230.3 | 235 | 120 |
| JZ29165 | 2 1/2" | 65 | 40.5 | 27 | 30 | 348.88 | 356 | 72 |
| JZ29180 | 3" | 80 | 45.5 | 29.5 | 34 | 512.54 | 523 | 64 |
| JZ291100 | 4" | 100 | 58.5 | 38 | 44 | 978.04 | 998 | 36 |
| JZ291150 | 6" | 150 | 65 | 42 | 65 | | | |





# Fig.300

**Caps**

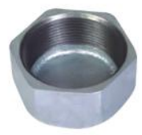

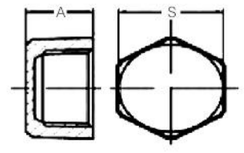


| Code | Size | | A | S | Unit Weight | | Packing |
|---|---|---|---|---|---|---|---|
| | | | | | Black | Galv. | Carton |
| | NPS | DN | mm | mm | g | g | Pcs/ctn |
| JZ30010 | 3/8" | 10 | 17 | 20.6 | 29.4 | 30 | 1200 |
| JZ30015 | 1/2" | 15 | 19 | 24.6 | 44.1 | 45 | 700 |
| JZ30020 | 3/4" | 20 | 22 | 30.4 | 68.6 | 70 | 500 |
| JZ30025 | 1" | 25 | 24 | 37.2 | 106.82 | 109 | 360 |
| JZ30032 | 1 1/4" | 32 | 27 | 47 | 180.32 | 184 | 220 |
| JZ30040 | 1 1/2" | 40 | 28 | 53 | 223.44 | 228 | 160 |
| JZ30050 | 2" | 50 | 32 | 65 | 349.86 | 357 | 100 |

# Fig.301

**Round Caps**

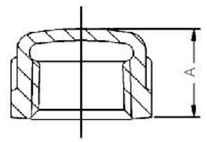


| Code | Size | | A | Unit Weight | | Packing |
|---|---|---|---|---|---|---|
| | | | | Black | Galv. | Carton |
| | NPS | DN | mm | g | g | Pcs/ctn |
| JZ3018 | 1/4" | 8 | 16 | 24.5 | 25 | 1200 |
| JZ30110 | 3/8" | 10 | 17 | 29.4 | 30 | 1200 |
| JZ30115 | 1/2" | 15 | 19 | 47.04 | 48 | 700 |
| JZ30120 | 3/4" | 20 | 22 | 68.6 | 70 | 500 |
| JZ30125 | 1" | 25 | 24 | 106.82 | 109 | 360 |
| JZ30132 | 1 1/4" | 32 | 27 | 162.68 | 166 | 220 |
| JZ30140 | 1 1/2" | 40 | 27.5 | 203.84 | 208 | 160 |
| JZ30150 | 2" | 50 | 32 | 319.48 | 326 | 100 |
| JZ30165 | 2 1/2" | 65 | 36 | 432.18 | 441 | 60 |
| JZ30180 | 3" | 80 | 39 | 610.54 | 623 | 38 |
| JZ301100 | 4" | 100 | 46 | 1078.98 | 1101 | 20 |
| JZ301150 | 6" | 150 | 56 | | | |

WEIZIDOM

www.wsdsolution.com
www.wsdvalves.com

# Groove Pipe Fitting

JIANZHI & HITHERTOP

WEIZIDOM GROUP

Rigid Coupling

Flexible Coupling

Mechanical Tee Grooved outlet

Mechanical Tee Threaded outlet

Grooved flange

90° Elbow

45° Elbow

22.5° Elbow

11.25° Elbow

Tee

Grooved Reducing Tee

Threaded Reducing Tee

Cross

Grooved Reducing Cross

Threaded Reducing Cross

Cap

Grooved Concentric Reducer

Threaded Concentric Reducer

Grooved Eccentric Reducer

Adaptor Flange

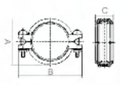


**刚性卡箍**
**Rigid Coupling**
**XGQT1**

| Nominal Size mm/in | Pipe OD. mm/in | Working Pressure psi/MPa | Dimensions mm/in | | | Bolt Size | Nominal Size mm/in | Pipe OD. mm/in | Working Pressure psi/MPa | Dimensions mm/in | | | Bolt Size |
|---|---|---|---|---|---|---|---|---|---|---|---|---|---|
| | | | A mm/in | B mm/in | C mm/in | No.–Size mm | | | | A mm/in | B mm/in | C mm/in | No.–Size mm |
| 规格 | 管子基本尺寸 | 工作压力 | 尺寸 | | | 螺栓 | 规格 | 管子基本尺寸 | 工作压力 | 尺寸 | | | 螺栓 |
| 25<br>1 | 33.7<br>1.327 | | 56<br>2.20 | 98<br>3.85 | 44<br>1.74 | 3/8*45–2 | 125<br>5 | 133<br>5.25 | | 162<br>6.37 | 213<br>8.38 | 50<br>1.96 | 1/2*75–2 |
| 32<br>1¼ | 42.4<br>1.669 | | 65<br>2.55 | 108<br>4.25 | 44<br>1.74 | 3/8*45–2 | 125<br>5 | 139.7<br>5.5 | | 170<br>6.73 | 220<br>8.66 | 50<br>1.96 | 1/2*75–2 |
| 40<br>1½ | 48.3<br>1.9 | | 72<br>2.84 | 114<br>4.48 | 44<br>1.74 | 3/8*45–2 | 125<br>5 | 141.3<br>5.563 | | 171<br>6.73 | 222<br>8.74 | 50<br>1.96 | 1/2*75–2 |
| 50<br>2 | 60.3<br>2.375 | | 84<br>3.30 | 126<br>4.96 | 46<br>1.81 | 3/8*55–2 | 150<br>6 | 159<br>6.25 | | 190<br>7.48 | 241<br>9.48 | 50<br>1.96 | 1/2*75–2 |
| 65<br>2½ | 73<br>2.875 | 300psi<br>2.07MPa | 97<br>3.81 | 140<br>5.52 | 46<br>1.81 | 3/8*55–2 | 150<br>6 | 165.1<br>6.5 | 300psi<br>2.07MPa | 196<br>7.71 | 248<br>9.76 | 50<br>1.96 | 1/2*75–2 |
| 65<br>2½ | 76.1<br>3 | | 100<br>3.93 | 142<br>5.59 | 46<br>1.81 | 3/8*55–2 | 150<br>6 | 168.3<br>6.625 | | 200<br>7.87 | 252<br>9.92 | 50<br>1.96 | 1/2*75–2 |
| 80<br>3 | 88.9<br>3.5 | | 114<br>4.48 | 154<br>6.06 | 46<br>1.81 | 3/8*55–2 | 200<br>8 | 219.1<br>8.625 | | 258<br>10.15 | 322<br>12.67 | 60<br>2.36 | 5/8*95–2 |
| 100<br>4 | 108<br>4.25 | | 135<br>5.31 | 186<br>7.32 | 50<br>1.96 | 1/2*65–2 | 250<br>10 | 273<br>10.75 | | 318<br>12.51 | 400<br>15.74 | 62<br>2.44 | 3/4*110–2 |
| 100<br>4 | 114.3<br>4.5 | | 138<br>5.43 | 192<br>7.55 | 50<br>1.96 | 1/2*65–2 | 300<br>12 | 323.9<br>12.750 | | 372<br>14.64 | 454<br>17.87 | 64<br>2.51 | 3/4*120–2 |

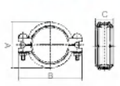


**挠性卡箍**
**Flexible Coupling**
**XGQT2**

| Nominal Size mm/in | Pipe OD. mm/in | Working Pressure psi/MPa | Dimensions mm/in | | | Bolt Size | Nominal Size mm/in | Pipe OD. mm/in | Working Pressure psi/MPa | Dimensions mm/in | | | Bolt Size |
|---|---|---|---|---|---|---|---|---|---|---|---|---|---|
| | | | A mm/in | B mm/in | C mm/in | No.–Size mm | | | | A mm/in | B mm/in | C mm/in | No.–Size mm |
| 规格 | 管子基本尺寸 | 工作压力 | 尺寸 | | | 螺栓 | 规格 | 管子基本尺寸 | 工作压力 | 尺寸 | | | 螺栓 |
| 25<br>1 | 33.7<br>1.327 | | 56<br>2.20 | 98<br>3.85 | 44<br>1.74 | 3/8*45–2 | 125<br>5 | 133<br>5.25 | | 162<br>6.37 | 213<br>8.38 | 50<br>1.96 | 1/2*75–2 |
| 32<br>1¼ | 42.4<br>1.669 | | 65<br>2.55 | 108<br>4.25 | 44<br>1.74 | 3/8*45–2 | 125<br>5 | 139.7<br>5.5 | | 170<br>6.73 | 220<br>8.66 | 50<br>1.96 | 1/2*75–2 |
| 40<br>1½ | 48.3<br>1.9 | | 72<br>2.84 | 114<br>4.48 | 44<br>1.74 | 3/8*45–2 | 125<br>5 | 141.3<br>5.563 | | 171<br>6.73 | 222<br>8.74 | 50<br>1.96 | 1/2*75–2 |
| 50<br>2 | 60.3<br>2.375 | | 84<br>3.30 | 126<br>4.96 | 46<br>1.81 | 3/8*55–2 | 150<br>6 | 159<br>6.25 | | 190<br>7.48 | 241<br>9.48 | 50<br>1.96 | 1/2*75–2 |
| 65<br>2½ | 73<br>2.875 | 300psi<br>2.07MPa | 97<br>3.81 | 140<br>5.52 | 46<br>1.81 | 3/8*55–2 | 150<br>6 | 165.1<br>6.5 | 300psi<br>2.07MPa | 196<br>7.71 | 248<br>9.76 | 50<br>1.96 | 1/2*75–2 |
| 65<br>2½ | 76.1<br>3 | | 100<br>3.93 | 142<br>5.59 | 46<br>1.81 | 3/8*55–2 | 150<br>6 | 168.3<br>6.625 | | 200<br>7.87 | 252<br>9.92 | 50<br>1.96 | 1/2*75–2 |
| 80<br>3 | 88.9<br>3.5 | | 114<br>4.48 | 154<br>6.06 | 46<br>1.81 | 3/8*55–2 | 200<br>8 | 219.1<br>8.625 | | 258<br>10.15 | 322<br>12.67 | 60<br>2.36 | 5/8*95–2 |
| 100<br>4 | 108<br>4.25 | | 135<br>5.31 | 186<br>7.32 | 50<br>1.96 | 1/2*65–2 | 250<br>10 | 273<br>10.75 | | 318<br>12.51 | 400<br>15.74 | 62<br>2.44 | 3/4*110–2 |
| 100<br>4 | 114.3<br>4.5 | | 138<br>5.43 | 192<br>7.55 | 50<br>1.96 | 1/2*65–2 | 300<br>12 | 323.9<br>12.750 | | 372<br>14.64 | 454<br>17.87 | 64<br>2.51 | 3/4*120–2 |

注：产品尺寸可能会因技术原因有所改动，恕不另行通知，如有疑问请征询威斯盾集团技术部
Note: The measurements of products maybe changed for the technical reason without responsibility note, please feel free to contact technical Dept.

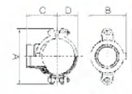


**沟槽式机械三通**
**Mechanical Tee**
**Grooved outlet**
**XGQT3**

| Nominal Size mm/in | Pipe OD. mm/in | Working Pressure psi/MPa | Hole Dia. Mm/in +1.6,0/+0.063,0 | Dimensions mm/in | | | | Bolt Size | Nominal Size mm/in | Pipe OD. mm/in | Working Pressure psi/MPa | Hole Dia. Mm/in +1.6,0/+0.063,0 | Dimensions mm/in | | | | Bolt Size |
|---|---|---|---|---|---|---|---|---|---|---|---|---|---|---|---|---|---|
| 规格 | 管子基本尺寸 | 工作压力 | 开孔尺寸 | A | B | C | D | 螺栓规格 | 规格 | 管子基本尺寸 | 工作压力 | 开孔尺寸 | A | B | C | D | 螺栓规格 |
| 50 × 25<br>2 × 1 | 60.3 × 33.7<br>2.375 × 1.315 | | 38<br>1.50 | 118<br>4.64 | 71<br>2.80 | 69<br>2.71 | 40<br>1.57 | 3/8*55–2 | 80 × 50<br>3 × 2 | 88.9 × 60.3<br>3.500 × 2.375 | | 61<br>2.40 | 150<br>5.90 | 100<br>3.93 | 85<br>3.33 | 56<br>2.20 | 3/8*55–2 |
| 50 × 32<br>2 × 1¼ | 60.3 × 42.4<br>2.375 × 1.660 | | 46<br>1.81 | 118<br>4.64 | 75<br>2.95 | 69<br>2.71 | 40<br>1.57 | 3/8*55–2 | 80 × 65<br>3 × 2½ | 88.9 × 73.0<br>3.500 × 2.875 | | 61<br>2.40 | 150<br>5.90 | 100<br>3.93 | 85<br>3.33 | 56<br>2.20 | 3/8*55–2 |
| 50 × 40<br>2 × 1½ | 60.3 × 48.3<br>2.375 × 1.900 | | 46<br>1.81 | 118<br>4.64 | 75<br>2.95 | 69<br>2.71 | 40<br>1.57 | 3/8*55–2 | 80 × 65<br>3 × 2½ | 88.9 × 76.1<br>3.500 × 3.000 | | 61<br>2.40 | 150<br>5.90 | 100<br>3.93 | 85<br>3.33 | 56<br>2.20 | 3/8*55–2 |
| 65 × 25<br>2½ × 1 | 73.0 × 33.7<br>2.875 × 1.315 | | 38<br>1.50 | 133<br>5.23 | 72<br>2.83 | 77<br>3.03 | 47<br>1.a5 | 3/8*55–2 | 100 × 50<br>4 × 2 | 108.0 × 60.3<br>4.250 × 2.375 | | 61<br>2.40 | 172<br>6.77 | 106.5<br>4.19 | 92<br>3.78 | 64.5<br>2.54 | 1/2*65–2 |
| 65 × 32<br>2½ × 1¼ | 73.0 × 42.4<br>2.875 × 1.660 | | 46<br>1.81 | 133<br>523 | 81<br>3.18 | 77<br>3.03 | 47<br>1.65 | 3/8*55–2 | 100 × 65<br>4 × 2½ | 108.0 × 76.1<br>4.250 × 3.000 | | 81<br>3.18 | 172<br>6.2277 | 106.5<br>4.19 | 92<br>3.78 | 64.5<br>2.54 | 1/2*65_2 |
| 65 × 40<br>2½ × 1½ | 73.0 × 48.3<br>2.875 × 1.900 | 300psi<br>2.07MPa | 53<br>2.08 | 133<br>5.23 | 86<br>3.38 | 77<br>3.03 | 47<br>1.65 | 3/8*55–2 | 100 × 25<br>4 × 1 | 114.3 × 33.7<br>4.500 × 1.315 | 300psi<br>2.07MPa | 38<br>1.50 | 182<br>7.16 | 73<br>2.87 | 99<br>3.90 | 70<br>2.76 | 1/2*65–2 |
| 65 × 25<br>2½ × 1 | 76.1 × 33.7<br>3.000 × 1.315 | | 38<br>1.50 | 136<br>5.35 | 72<br>2.83 | 78<br>3.07 | 49<br>1.93 | 3/8*55–2 | 100 × 32<br>4 × 1¼ | 114.3 × 42.4<br>4.500 × 1.660 | | 46<br>1.81 | 182<br>7.16 | 82<br>3.22 | 99<br>3.90 | 70<br>2.76 | 1/2*65–2 |
| 65 × 32<br>2½ × 1¼ | 76.1 × 42.4<br>3.000 × 1.660 | | 46<br>1.81 | 136<br>5.35 | 81<br>3.18 | 78<br>3.07 | 49<br>1.93 | 3/8*55–2 | 100 × 40<br>4 × 1½ | 114.3 × 48.3<br>4.500 × 1.900 | | 53<br>2.08 | 182<br>7.16 | 87<br>3.42 | 99<br>3.90 | 70<br>2.76 | 1/2*65–2 |
| 65 × 40<br>2½ × 1½ | 76.1 × 48.3<br>3.000 × 1.900 | | 53<br>2.08 | 136<br>5.35 | 86<br>3.38 | 78<br>3.07 | 49<br>1.93 | 3/8*55–2 | 100 × 50<br>4 × 2 | 114.3 × 60.3<br>4.500 × 2.375 | | 61<br>2.40 | 182<br>7.16 | 100<br>3.93 | 99<br>3.90 | 70<br>2.76 | 1/2*65–2 |
| 80 × 25<br>3 × 1 | 88.9 × 33.7<br>3.500 × 1.315 | | 38<br>1.50 | 150<br>5.98 | 73<br>2.87 | 85<br>3.33 | 56<br>2.20 | 3/8*55–2 | 100 × 65<br>4 × 2½ | 114.3 × 73.0<br>4.500 × 2.875 | | 81<br>3.18 | 182<br>7.16 | 118<br>4.64 | 99<br>3.90 | 70<br>2.76 | 1/2*65–2 |
| 80 × 32<br>3 × 1¼ | 88.9 × 42.4<br>3.500 × 1.660 | | 46<br>1.81 | 150<br>5.98 | 82<br>3.22 | 85<br>3.33 | 56<br>2.20 | 3/8*55–2 | 100 × 65<br>4 × 2½ | 114.3 × 76.1<br>4.500 × 3.000 | | 81<br>3.18 | 182<br>7.16 | 118<br>4.64 | 99<br>3.90 | 70<br>2.76 | 1/2*65–2 |
| 80 × 40<br>3 × 1½ | 88.9 × 48.3<br>3.500 × 1.900 | | 53<br>2.08 | 150<br>5.90 | 87<br>3.42 | 85<br>3.33 | 56<br>2.20 | 3/8*55–2 | 100 × 80<br>4 × 3 | 114.3 × 88.9<br>4.500 × 3.500 | | 86<br>3.38 | 182<br>7.16 | 124<br>4.88 | 99<br>3.90 | 70<br>2.76 | 1/2*65–2 |

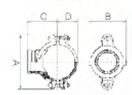


**沟槽式机械三通**
**Mechanical Tee**
**Grooved outlet**
**XGQT3**

| Nominal Size mm/in | Pipe OD. mm/in | Working Pressure psi/MPa | Hole Dia. Mm/in +1.6,0/+0.063,0 | Dimensions mm/in | | | | Bolt Size | Nominal Size mm/in | Pipe OD. mm/in | Working Pressure psi/MPa | Hole Dia. Mm/in +1.6,0/+0.063,0 | Dimensions mm/in | | | | Bolt Size |
|---|---|---|---|---|---|---|---|---|---|---|---|---|---|---|---|---|---|
| 规格 | 管子基本尺寸 | 工作压力 | 开孔尺寸 | A | B | C | D | 螺栓规格 | 规格 | 管子基本尺寸 | 工作压力 | 开孔尺寸 | A | B | C | D | 螺栓规格 |
| 125 × 50<br>5 × 2 | 139.7 × 60.3<br>5.500 × 2.375 | | 61<br>2.40 | 215<br>8.46 | 102<br>4.01 | 113<br>4.44 | 83<br>3.26 | 1/2*75–2 | 150 × 50<br>6 × 2 | 165.1 × 60.3<br>6.500 × 2.375 | | 61<br>2.40 | 240<br>9.44 | 102<br>4.01 | 126<br>4.96 | 96<br>3.77 | 9/16*75–2 |
| 125 × 65<br>5 × 2½ | 139.7 × 76.1<br>5.500 × 3.000 | | 81<br>3.18 | 215<br>8.46 | 119<br>4.68 | 113<br>4.44 | 83<br>3.26 | 1/2*75–2 | 150 × 65<br>6 × 2½ | 165.1 × 76.1<br>6.500 × 3.000 | | 81<br>3.18 | 240<br>9.44 | 119<br>4.68 | 126<br>4.96 | 96<br>3.77 | 9/16*75–2 |
| 125 × 80<br>5 × 3 | 139.7 × 88.9<br>5.500 × 3.500 | | 86<br>3.38 | 215<br>8.46 | 134<br>5.27 | 113<br>4.44 | 83<br>3.26 | 1/2*75–2 | 150 × 80<br>6 × 3 | 165.1 × 88.9<br>6.500 × 3.500 | | 86<br>3.38 | 240<br>9.44 | 134<br>5.27 | 126<br>4.96 | 96<br>3.77 | 9/16*75–2 |
| 125 × 100<br>5 × 4 | 139.7 × 114.3<br>5.500 × 4.500 | | 114<br>4.48 | 215<br>8.46 | 158<br>6.22 | 115<br>4.52 | 83<br>3.26 | 1/2*75–2 | 150 × 100<br>6 × 4 | 165.1 × 114.3<br>6.500 × 4.500 | | 114<br>4.48 | 240<br>9.44 | 158<br>6.22 | 128<br>5.04 | 96<br>3.77 | 9/16*75–2 |
| 125 × 50<br>5 × 2 | 141.3 × 60.3<br>5.563 × 2.375 | | 61<br>2.40 | 215<br>8.46 | 102<br>4.01 | 114<br>4.48 | 83<br>3.26 | 1/2*75–2 | 150 × 50<br>6 × 2 | 168.3 × 60.3<br>6.625 × 2.375 | | 61<br>2.40 | 244<br>9.60 | 102<br>4.01 | 128<br>5.04 | 97<br>3.81 | 9/16*75–2 |
| 125 × 65<br>5 × 2½ | 141.3 × 76.1<br>5.563 × 3.000 | | 81<br>3.18 | 215<br>8.46 | 119<br>4.64 | 114<br>4.48 | 83<br>3.26 | 1/2*75–2 | 150 × 65<br>6 × 2½ | 168.3 × 73.0<br>6.625 × 2.875 | | 81<br>3.18 | 244<br>9.60 | 119<br>4.68 | 128<br>5.04 | 97<br>3.81 | 9/16*75–2 |
| 125 × 80<br>5 × 3 | 141.3 × 88.9<br>5.563 × 3.500 | 300psi<br>2.07MPa | 86<br>3.38 | 215<br>8.46 | 134<br>5.27 | 114<br>4.48 | 83<br>3.26 | 1/2*75–2 | 150 × 65<br>6 × 2½ | 168.3 × 76.1<br>6.625 × 3.000 | 300psi<br>2.07MPa | 81<br>3.18 | 244<br>9.60 | 119<br>4.68 | 128<br>5.04 | 97<br>3.81 | 9/16*75–2 |
| 125 × 100<br>5 × 4 | 141.3 × 114.3<br>5.563 × 4.500 | | 114<br>4.48 | 215<br>8.46 | 158<br>6.22 | 115<br>4.52 | 83<br>3.26 | 1/2*75–2 | 150 × 80<br>6 × 3 | 168.3 × 88.9<br>6.625 × 3.500 | | 86<br>3.38 | 244<br>9.60 | 134<br>5.27 | 128<br>5.04 | 97<br>3.81 | 9/16*75–2 |
| 150 × 50<br>6 × 2 | 159.0 × 60.3<br>6.250 × 2.375 | | 61<br>2.40 | 230<br>9.05 | 98<br>3.85 | 123<br>4.84 | 90<br>3.54 | 9/16*75–2 | 150 × 100<br>6 × 4 | 168.3 × 114.3<br>6.625 × 4.500 | | 114<br>4.48 | 244<br>9.60 | 158<br>6.22 | 130<br>5.11 | 97<br>3.81 | 9/16*75–2 |
| 150 × 65<br>6 × 2½ | 159.0 × 76.1<br>6.250 × 3.000 | | 81<br>3.18 | 230<br>9.05 | 121<br>4.76 | 123<br>4.84 | 90<br>3.54 | 9/16*75–2 | 200 × 50<br>8 × 2 | 219.1 × 60.3<br>8.625 × 2.375 | | 61<br>2.40 | 308<br>12.12 | 102<br>4.01 | 153<br>6.02 | 124<br>4.88 | 5/8*95–2 |
| 150 × 80<br>6 × 3 | 159.0 × 88.9<br>6.250 × 3.500 | | 86<br>3.38 | 230<br>9.05 | 134<br>5.27 | 123<br>4.84 | 90<br>3.54 | 9/16*75–2 | 200 × 65<br>8 × 2½ | 219.1 × 76.1<br>8.625 × 3.000 | | 81<br>3.18 | 308<br>12.12 | 119<br>4.68 | 153<br>6.02 | 124<br>4.88 | 5/8*95–2 |
| 150 × 100<br>6 × 4 | 159.0 × 108.0<br>6.250 × 4.250 | | 114<br>4.48 | 230<br>9.05 | 155<br>6.10 | 123<br>4.84 | 90<br>3.54 | 9/16*75–2 | 200 × 80<br>8 × 3 | 219.1 × 88.9<br>8.625 × 3.500 | | 86<br>3.38 | 308<br>12.12 | 134<br>5.27 | 153<br>6.02 | 124<br>4.88 | 5/8*95–2 |
| 150 × 100<br>6 × 4 | 159.0 × 114.3<br>6.250 × 4.500 | | 114<br>4.48 | 230<br>9.05 | 155<br>6.10 | 123<br>4.84 | 90<br>3.54 | 9/16*75–2 | 200 × 100<br>8 × 4 | 219.1 × 114.3<br>8.625 × 4.500 | | 114<br>4.48 | 308<br>12.12 | 158<br>6.22 | 155<br>6.10 | 124<br>4.88 | 5/8*95–2 |

注：产品尺寸可能会因技术原因有所改动，恕不另行通知，如有疑问请征询威斯盾集团技术部
Note: The measurements of products maybe changed for the technical reason without responsibility note, please feel free to contact technical Dept.

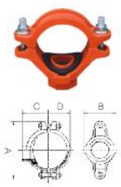



**螺纹式机械三通**
**Mechanical Tee**
**Threaded outlet**
**XGQT3S**

| Nominal Size mm/in 规格 | Pipe OD. mm/in 管子基本尺寸 | Working Pressure psi/MPa 工作压力 | Hole Dia. Mm/in +1.6,0/+0.063,0 开孔尺寸 | Dimensions mm/in A | B | C | D | Bolt Size 螺栓规格 | Nominal Size mm/in 规格 | Pipe OD. mm/in 管子基本尺寸 | Working Pressure psi/MPa 工作压力 | Hole Dia. Mm/in +1.6,0/+0.063,0 开孔尺寸 | Dimensions mm/in A | B | C | D | Bolt Size 螺栓规格 |
|---|---|---|---|---|---|---|---|---|---|---|---|---|---|---|---|---|---|
| 50×15<br>2×1/2 | 60.3×21.3<br>2.375×0.825 | 300psi<br>2.07MPa | 30<br>1.18 | 116<br>4.57 | 68<br>2.68 | 58<br>2.28 | 40<br>1.57 | 3/8*55-2 | 65×15<br>2 1/2×1/2 | 76.1×21.3<br>3.000×0.825 | 300psi<br>2.07MPa | 30<br>1.18 | 137<br>5.39 | 71<br>2.80 | 68<br>2.72 | 49.5<br>1.95 | 3/8*55-2 |
| 50×20<br>2×3/4 | 60.3×26.9<br>2.375×1.050 | | 30<br>1.18 | 116<br>4.57 | 68<br>2.68 | 58<br>2.28 | 39<br>1.53 | 3/8*55-2 | 65×20<br>2 1/2×3/4 | 76.1×26.9<br>3.000×1.050 | | 30<br>1.18 | 137<br>5.39 | 71<br>2.80 | 68<br>2.72 | 49.5<br>1.95 | 3/8*55-2 |
| 50×25<br>2×1 | 60.3×33.7<br>2.375×1.315 | | 38<br>1.50 | 118<br>4.64 | 71<br>2.80 | 58<br>2.36 | 40<br>1.57 | 3/8*55-2 | 65×25<br>2 1/2×1 | 76.1×33.7<br>3.000×1.315 | | 38<br>1.50 | 136<br>5.35 | 72<br>2.83 | 69<br>2.72 | 49<br>1.93 | 3/8*55-2 |
| 50×32<br>2×1 1/4 | 60.3×42.4<br>2.375×1.660 | | 46<br>1.81 | 118<br>4.64 | 75<br>2.95 | 60<br>2.56 | 40<br>1.57 | 3/8*55-2 | 65×32<br>2 1/2×1 1/4 | 76.1×42.4<br>3.000×1.660 | | 46<br>1.81 | 136<br>5.35 | 81<br>3.18 | 71<br>2.72 | 49<br>1.93 | 3/8*55-2 |
| 50×40<br>2×1 1/2 | 60.3×48.3<br>2.375×1.900 | | 46<br>1.81 | 118<br>4.64 | 75<br>2.95 | 63<br>2.56 | 40<br>1.57 | 3/8*55-2 | 65×40<br>2 1/2×1 1/2 | 76.1×48.3<br>3.000×1.900 | | 53<br>2.08 | 136<br>5.35 | 86<br>3.38 | 71<br>2.72 | 49.<br>1.93 | 3/8*55-2 |
| 65×15<br>2 1/2×1/2 | 73.0×21.3<br>2.875×0.825 | | 30<br>1.18 | 144<br>5.66 | 71<br>2.80 | 66<br>2.72 | 49<br>1.93 | 3/8*55-2 | 80×15<br>3×1/2 | 88.9×21.3<br>3.500×0.825 | | 30<br>1.18 | 152<br>5.98 | 72.5<br>2.85 | 74<br>3.15 | 56.5<br>2.22 | 3/8*55-2 |
| 65×20<br>2 1/2×3/4 | 73.0×26.9<br>2.875×1.050 | | 30<br>1.18 | 144<br>5.66 | 71<br>2.80 | 66<br>2.72 | 49<br>1.93 | 3/8*55-2 | 80×20<br>3×3/4 | 88.9×26.9<br>3.500×1.050 | | 30<br>1.18 | 152<br>5.98 | 72.5<br>2.85 | 74<br>3.15 | 56.5<br>2.22 | 3/8*55-2 |
| 65×25<br>2 1/2×1 | 73.0×33.7<br>2.875×1.315 | | 38<br>1.50 | 133<br>5.23 | 72<br>2.83 | 67<br>2.72 | 47<br>1.85 | 3/8*55-2 | 80×25<br>3×1 | 88.9×33.7<br>3.500×1.315 | | 38<br>1.50 | 150<br>5.98 | 73<br>2.87 | 75<br>3.15 | 56<br>2.20 | 3/8*55-2 |
| 65×32<br>2 1/2×1 1/4 | 73.0×42.4<br>2.875×1.660 | | 46<br>1.81 | 133<br>523 | 81<br>3.18 | 69<br>2.87 | 47<br>1.85 | 3/8*55-2 | 80×32<br>3×1 1/4 | 88.9×42.4<br>3.500×1.660 | | 46<br>1.81 | 150<br>5.98 | 82<br>3.22 | 77<br>3.15 | 56<br>2.20 | 3/8*55-2 |
| 65×40<br>2 1/2×1 1/2 | 73.0×48.3<br>2.875×1.900 | | 53<br>2.08 | 133<br>5.23 | 86<br>3.38 | 69<br>2.87 | 47<br>1.85 | 3/8*55-2 | 80×40<br>3×1 1/2 | 88.9×48.3<br>3.500×1.900 | | 53<br>2.08 | 150<br>5.90 | 87<br>3.42 | 77<br>3.15 | 56<br>2.20 | 3/8*55-2 |

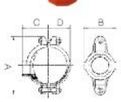


**螺纹式机械三通**
**Mechanical Tee**
**Threaded outlet**
**XGQT3S**

| Nominal Size mm/in 规格 | Pipe OD. mm/in 管子基本尺寸 | Working Pressure psi/MPa 工作压力 | Hole Dia. Mm/in +1.6,0/+0.063,0 开孔尺寸 | Dimensions mm/in A | B | C | D | Bolt Size 螺栓规格 | Nominal Size mm/in 规格 | Pipe OD. mm/in 管子基本尺寸 | Working Pressure psi/MPa 工作压力 | Hole Dia. Mm/in +1.6,0/+0.063,0 开孔尺寸 | Dimensions mm/in A | B | C | D | Bolt Size 螺栓规格 |
|---|---|---|---|---|---|---|---|---|---|---|---|---|---|---|---|---|---|
| 80×50<br>3×2 | 88.9×60.3<br>3.500×2.375 | 300psi<br>2.07MPa | 61<br>2.40 | 150<br>5.90 | 100<br>3.93 | 81<br>3.15 | 56<br>2.20 | 3/8*55-2 | 100×50<br>4×2 | 114.3×60.3<br>4.500×2.375 | 300psi<br>2.07MPa | 61<br>2.40 | 182<br>7.16 | 100<br>3.93 | 95<br>3.62 | 70<br>2.76 | 1/2*65-2 |
| 100×25<br>4×1 | 108.0×33.7<br>4.250×1.315 | | 38<br>1.50 | 172<br>6.77 | 78.5<br>3.09 | 87<br>3.43 | 64.5<br>2.54 | 1/2*65-2 | 100×65<br>4×21/2 | 114.3×73.0<br>4.500×2.875 | | 81<br>3.18 | 182<br>7.16 | 118<br>4.64 | 94<br>4.02 | 70<br>2.76 | 1/2*65-2 |
| 100×32<br>4×11/4 | 108.0×42.4<br>4.250×1.660 | | 46<br>1.81 | 172<br>6.77 | 89<br>3.50 | 87<br>3.43 | 64.5<br>2.54 | 1/2*65-2 | 100×65<br>4×21/2 | 114.3×76.1<br>4.500×3.000 | | 81<br>3.18 | 182<br>7.16 | 118<br>4.64 | 94<br>4.02 | 70<br>2.76 | 1/2*65-2 |
| 100×40<br>4×11/2 | 108.0×48.3<br>4.250×1.900 | | 53<br>2.08 | 172<br>6.77 | 89<br>3.50 | 87<br>3.43 | 64.5<br>2.54 | 1/2*65-2 | 100×80<br>4×3 | 114.3×88.9<br>4.500×3.500 | | 86<br>3.38 | 182<br>7.16 | 124<br>4.88 | 100<br>4.02 | 70<br>2.76 | 1/2*65-2 |
| 100×50<br>4×2 | 108.0×60.3<br>4.250×2.375 | | 61<br>2.40 | 172<br>6.77 | 106.5<br>4.19 | 92<br>3.62 | 64.5<br>2.54 | 1/2*65-2 | 125×25<br>5×1 | 133.0×33.7<br>5.250×1.315 | | 38<br>1.50 | 208<br>8.18 | 74<br>2.91 | 100<br>4.13 | 79<br>3.11 | 1/2*75-2 |
| 100×65<br>4×21/2 | 108.0×76.1<br>4.250×3.000 | | 81<br>3.18 | 172<br>6.77 | 106.5<br>4.19 | 96<br>3.78 | 64.5<br>2.54 | 1/2*65-2 | 125×32<br>5×11/4 | 133.0×42.4<br>5.250×1.660 | | 46<br>1.81 | 208<br>8.18 | 83<br>3.26 | 101<br>4.13 | 79<br>3.11 | 1/2*75-2 |
| 100×80<br>4×3 | 108.0×88.9<br>4.250×3.500 | | 86<br>3.38 | 172<br>6.77 | 106.5<br>4.19 | 100<br>3.94 | 64.5<br>2.54 | 1/2*65-2 | 125×40<br>5×11/2 | 133.0×48.3<br>5.250×1.900 | | 53<br>2.08 | 208<br>8.18 | 88<br>3.46 | 101<br>4.13 | 79<br>3.11 | 1/2*75-2 |
| 100×25<br>4×1 | 114.3×33.7<br>4.500×1.315 | | 38<br>1.50 | 182<br>7.16 | 73<br>2.87 | 89<br>3.66 | 70<br>2.76 | 1/2*65-2 | 125×50<br>5×2 | 133.0×60.3<br>5.250×2.375 | | 61<br>2.40 | 208<br>8.18 | 102<br>4.01 | 105<br>4.33 | 79<br>3.11 | 1/2*75-2 |
| 100×32<br>4×11/4 | 114.3×42.4<br>4.500×1.660 | | 46<br>1.81 | 182<br>7.16 | 82<br>3.22 | 90<br>3.74 | 70<br>2.76 | 1/2*65-2 | 125×65<br>5×21/2 | 133.0×76.1<br>5.250×3.000 | | 81<br>3.18 | 208<br>8.18 | 119<br>4.68 | 103<br>4.53 | 79<br>3.11 | 1/2*75-2 |
| 100×40<br>4×11/2 | 114.3×48.3<br>4.500×1.900 | | 53<br>2.08 | 182<br>7.16 | 87<br>3.42 | 90<br>3.82 | 70<br>2.76 | 1/2*65-2 | 125×80<br>5×3 | 133.0×88.9<br>5.250×3.500 | | 86<br>3.38 | 208<br>8.18 | 134<br>5.27 | 110<br>4.65 | 79<br>3.11 | 1/2*75-2 |

注：产品尺寸可能会因技术原因有所改动，恕不另行通知，如有疑问请征询威斯盾集团技术部
Note: The measurements of products maybe changed for the technical reason without responsibility note, please feel free to contact technical Dept.

**螺纹式机械三通**
**Mechanical Tee**
**Threaded outlet**
**XGQT3S**

| Nominal Size mm/in 规格 | Pipe OD. mm/in 管子基本尺寸 | Working Pressure psi/MPa 工作压力 | Hole Dia. Mm/in +1.6,0/+0.063,0 开孔尺寸 | Dimensions mm/in A | B | C | D | Bolt Size 螺栓规格 | Nominal Size mm/in 规格 | Pipe OD. mm/in 管子基本尺寸 | Working Pressure psi/MPa 工作压力 | Hole Dia. Mm/in +1.6,0/+0.063,0 开孔尺寸 | Dimensions mm/in A | B | C | D | Bolt Size 螺栓规格 |
|---|---|---|---|---|---|---|---|---|---|---|---|---|---|---|---|---|---|
| 125×25<br>5×1 | 139.7×33.7<br>5.500×1.315 | 300psi<br>2.07MPa | 38<br>1.50 | 215<br>8.46 | 74<br>2.91 | 103<br>4.33 | 83<br>3.26 | 1/2*75-2 | 150×40<br>6×11/2 | 165.1×48.3<br>6.500×1.900 | | 53<br>2.08 | 240<br>9.44 | 88<br>3.46 | 118<br>4.65 | 97.5<br>3.84 | 9/16*75-2 |
| 125×32<br>5×11/4 | 139.7×42.4<br>5.500×1.660 | | 46<br>1.81 | 215<br>8.46 | 83<br>3.26 | 104<br>4.41 | 83<br>3.26 | 1/2*75-2 | 150×50<br>6×2 | 165.1×60.3<br>6.500×2.375 | | 61<br>2.40 | 240<br>9.44 | 102<br>4.01 | 120<br>5.43 | 96<br>3.77 | 9/16*75-2 |
| 125×40<br>5×11/2 | 139.7×48.3<br>5.500×1.900 | | 53<br>2.08 | 215<br>8.46 | 88<br>3.46 | 104<br>4.41 | 83<br>3.26 | 1/2*75-2 | 150×65<br>6×21/2 | 165.1×76.1<br>6.500×3.000 | | 81<br>3.18 | 240<br>9.44 | 119<br>4.68 | 121<br>5.43 | 96<br>3.77 | 9/16*75-2 |
| 125×50<br>5×2 | 139.7×60.3<br>5.500×2.375 | | 61<br>2.40 | 215<br>8.46 | 102<br>4.01 | 108<br>4.53 | 83<br>3.26 | 1/2*75-2 | 150×80<br>6×3 | 165.1×88.9<br>6.500×3.500 | | 86<br>3.38 | 240<br>9.44 | 134<br>5.27 | 126<br>5.43 | 96<br>377 | 9/16*75-2 |
| 125×65<br>5×21/2 | 139.7×76.1<br>5.500×3.000 | | 81<br>3.18 | 215<br>8.46 | 119<br>4.68 | 108<br>453 | 83<br>3.26 | 1/2*75-2 | 150×100<br>6×4 | 165.1×114.3<br>6.500×4.500 | | 114<br>4.48 | 240<br>9.44 | 158<br>6.22 | 132<br>5.32 | 96<br>3.77 | 9/16*75-2 |
| 125×80<br>5×3 | 139.7×88.9<br>5.500×3.500 | | 86<br>3.38 | 215<br>8.46 | 134<br>5.27 | 113<br>4.72 | 83<br>3.26 | 1/2*75-2 | 150×25<br>6×1 | 168.3×33.7<br>6.625×1.315 | | 38<br>1.50 | 244<br>9.60 | 74<br>2.91 | 119<br>5.12 | 97<br>3.81 | 9/16*75-2 |
| 125×25<br>5×1 | 141.3×33.7<br>5.563×1.315 | | 38<br>1.50 | 215<br>8.46 | 74<br>2.91 | 103<br>4.33 | 84<br>3.31 | 1/2*75-2 | 150×32<br>6×11/4 | 168.3×42.4<br>6.625×1.660 | | 46<br>1.81 | 244<br>9.60 | 83<br>3.26 | 120<br>5.12 | 98.5<br>3.88 | 9/16*75-2 |
| 125×32<br>5×11/4 | 141.3×42.4<br>5.563×1.660 | | 46<br>1.81 | 215<br>8.46 | 83<br>3.26 | 104<br>4.41 | 84<br>3.31 | 1/2*75-2 | 150×40<br>6×11/2 | 168.3×48.3<br>6.625×1.900 | | 53<br>2.08 | 244<br>9.60 | 88<br>3.46 | 120<br>4.80 | 98.5<br>3.88 | 9/16*75-2 |
| 125×40<br>5×11/2 | 141.3×48.3<br>5.563×1.900 | | 53<br>2.00 | 215<br>8.46 | 88<br>3.46 | 104<br>4.41 | 84<br>3.31 | 1/2*75-2 | 150×50<br>6×2 | 168.3×60.3<br>6.625×2.375 | | 61<br>2.40 | 244<br>9.60 | 102<br>4.01 | 122<br>5.20 | 97<br>3.81 | 9/16*75-2 |
| 125×50<br>5×2 | 141.3×60.3<br>5.563×2.375 | | 61<br>2.40 | 215<br>8.46 | 102<br>4.01 | 108<br>4.53 | 83<br>3.26 | 1/2*75-2 | 150×65<br>6×21/2 | 168.3×73.0<br>6.625×2.875 | | 81<br>3.18 | 244<br>9.60 | 119<br>4.68 | 123<br>5.20 | 97<br>3.81 | 9/16*75-2 |
| 125×65<br>5×21/2 | 141.3×76.1<br>5.563×3.000 | | 81<br>3.18 | 215<br>8.46 | 119<br>4.64 | 108<br>4.53 | 83<br>3.26 | 1/2*75-2 | 150×65<br>6×21/2 | 168.3×76.1<br>6.625×3.000 | | 81<br>3.18 | 244<br>9.60 | 119<br>4.68 | 123<br>5.20 | 97<br>3.81 | 9/16*75-2 |
| 125×80<br>5×3 | 141.3×88.9<br>5.563×3.500 | | 86<br>3.38 | 215<br>8.46 | 134<br>5.27 | 114<br>4.72 | 83<br>3.26 | 1/2*75-2 | 150×80<br>6×3 | 168.3×88.9<br>6.625×3.500 | | 86<br>3.38 | 244<br>9.60 | 134<br>5.27 | 128<br>5.51 | 97<br>3.81 | 9/16*75-2 |
| 150×25<br>6×1 | 159.0×33.7<br>6.250×1.315 | | 38<br>1.50 | 244<br>9.60 | 78<br>3.07 | 116<br>4.57 | 94<br>3.70 | 9/16*75-2 | 150×100<br>6×4 | 168.3×114.3<br>6.625×4.500 | | 114<br>4.48 | 244<br>9.60 | 158<br>6.22 | 134<br>5.51 | 97<br>3.81 | 9/16*75-2 |
| 150×32<br>6×11/4 | 159.0×42.4<br>6.250×1.660 | | 46<br>1.81 | 244<br>9.60 | 93<br>3.66 | 118<br>4.65 | 94<br>3.70 | 9/16*75-2 | 200×25<br>8×1 | 219.1×33.7<br>8.625×1.315 | | 38<br>1.50 | 308<br>12.12 | 74<br>2.91 | 145<br>5.91 | 124<br>4.88 | 5/8*95-2 |
| 150×40<br>6×11/2 | 159.0×48.3<br>6.250×1.900 | | 53<br>2.08 | 244<br>9.60 | 93<br>3.66 | 118<br>4.65 | 94<br>3.70 | 9/16*75-2 | 200×32<br>8×11/4 | 219.1×42.4<br>8.625×1.660 | | 46<br>1.81 | 308<br>12.12 | 83<br>3.26 | 146<br>5.91 | 124<br>4.88 | 5/8*95-2 |
| 150×50<br>6×2 | 159.0×60.3<br>6.250×2.375 | | 61<br>2.40 | 230<br>9.05 | 98<br>3.85 | 115<br>4.53 | 90<br>3.54 | 9/16*75-2 | 200×40<br>8×11/2 | 219.1×48.3<br>8.625×1.g00 | | 53<br>2.08 | 308<br>12.12 | 88<br>3.46 | 146<br>5.91 | 124<br>4.88 | 5/8*95-2 |
| 150×65<br>6×21/2 | 159.0×76.1<br>6.250×3.000 | | 81<br>3.18 | 230<br>9.05 | 121<br>4.76 | 125<br>4.92 | 90<br>3.54 | 9/16*75-2 | 200×50<br>8×2 | 219.1×60.3<br>8.625×2.375 | | 61<br>2.40 | 308<br>12.12 | 102<br>4.01 | 149<br>6.30 | 124<br>488 | 5/8*95-2 |
| 150×80<br>6×3 | 159.0×88.9<br>6.250×3.500 | | 86<br>3.38 | 230<br>9.05 | 134<br>5.27 | 125<br>4.92 | 90<br>3.54 | 9/16*75-2 | 200×65<br>8×21/2 | 219.1×76.1<br>8.625×3.000 | | 81<br>3.18 | 308<br>12.12 | 119<br>4.68 | 149<br>6.24 | 124<br>4.88 | 5/8*95-2 |
| 150×100<br>6×4 | 159.0×114.3<br>6.250×4.500 | | 114<br>4.48 | 230<br>9.05 | 155<br>6.10 | 130<br>5.12 | 90<br>3.54 | 9/16*75-2 | 200×80<br>8×3 | 219.1×88.9<br>8.625×3.500 | | 86<br>3.38 | 308<br>12.12 | 134<br>5.27 | 154<br>6.30 | 124<br>4.88 | 5/8*95-2 |
| 150×25<br>6×1 | 165.1×33.7<br>6.500×1.315 | | 38<br>1.50 | 240<br>9.44 | 74<br>2.91 | 117<br>465 | 96<br>3.77 | 9/16*75-2 | 200×100<br>8×4 | 219.1×114.3<br>8.625×4.500 | | 114<br>4.48 | 308<br>12.12 | 158<br>6.22 | 159<br>630 | 124<br>4.88 | 5/8*95-2 |
| 150×32<br>6×11/4 | 165.1×42.4<br>6.500×1.660 | | 46<br>1.81 | 240<br>9.44 | 83<br>3.26 | 118<br>4.65 | 97.5<br>3.84 | 9/16*75-2 | | | | | | | | | |

注：产品尺寸可能会因技术原因有所改动，恕不另行通知，如有疑问请征询威斯盾集团技术部
Note: The measurements of products maybe changed for the technical reason without responsibility note, please feel free to contact technical Dept.

### Grooved Flange ANSI Class 150 沟槽法兰

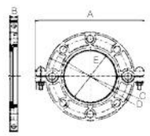

沟槽法兰
Grooved flange
XGQT09

| Nominal Size mm/in | Pipe OD. mm/in | Working Pressure psi/MPa | Dimensions mm/in | | | | | Bolt Size | |
|---|---|---|---|---|---|---|---|---|---|
| | | | A mm/in | B mm/in | C mm/in | D mm/in | E mm/in | No.–Size mm/in | |
| 规格 | 管子基本尺寸 | 工作压力 | 尺寸 | | | | | 螺栓 | |
| 50<br>2 | 60.3<br>2.375 | 300psi<br>2.07MPa | 206<br>8.11 | 19<br>0.74 | 152<br>5.98 | 121<br>4.76 | 57.5<br>2.26 | M10*50–2 | 5/8–4 |
| 65<br>21/2 | 73<br>2.875 | | 230<br>9.05 | 19<br>0.74 | 178<br>7.00 | 140<br>5.51 | 69.0<br>2.71 | M10*50–2 | 5/8–4 |
| 80<br>3 | 88.9<br>3.5 | | 244<br>9.60 | 19<br>0.74 | 191<br>7.52 | 152<br>5.98 | 85.0<br>3.34 | M10*50–2 | 5/8–4 |
| 100<br>4 | 114.3<br>4.5 | | 280<br>11.02 | 19<br>0.74 | 229<br>9.00 | 191<br>7.52 | 110.5<br>4.35 | M12*55–2 | 5/8–8 |
| 125<br>5 | 141.3<br>5.563 | | 322<br>12.67 | 22<br>0.86 | 250<br>9.84 | 216<br>8.50 | 137.0<br>5.39 | M12*65–2 | 3/4–8 |
| 150<br>6 | 168.3<br>6.625 | | 346<br>13.62 | 22<br>0.86 | 285<br>11.22 | 241.5<br>9.50 | 164.0<br>6.45 | M12*65–2 | 3/4–8 |
| 200<br>8 | 219.1<br>8.625 | | 410<br>16.14 | 24<br>0.94 | 340.0<br>13.38 | 298.5<br>11.75 | 214.0<br>8.42 | 3/8*70–2 | 3/4–8 |
| 250<br>10 | 273<br>10.75 | | 478.0<br>18.81 | 25<br>0.98 | 405.6<br>15.97 | 362.0<br>14.25 | 268.0<br>10.55 | 3/8*70–2 | 7/8–12 |

### Grooved Flange PN 16 沟槽法兰

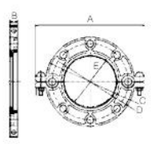

沟槽法兰
Grooved flange
XGQT09

| Nominal Size mm/in | Pipe OD. mm/in | Working Pressure psi/MPa | Dimensions mm/in | | | | | Bolt Size | |
|---|---|---|---|---|---|---|---|---|---|
| | | | A mm/in | B mm/in | C mm/in | D mm/in | E mm/in | No.–Size mm/in | |
| 规格 | 管子基本尺寸 | 工作压力 | 尺寸 | | | | | 螺栓 | |
| 50<br>2 | 60.3<br>2.375 | 232psi<br>1.6MPa | 215<br>8.46 | 24<br>0.95 | 160<br>6.29 | 125<br>4.92 | 57.5<br>2.26 | M10*50–2 | 4–M16 |
| 65<br>21/2 | 73<br>2.875 | | 240<br>9.44 | 24<br>0.95 | 176<br>6.92 | 145<br>5.71 | 69.8<br>2.74 | M10*50–2 | 4–M16 |
| 65<br>21/2 | 76.1<br>3 | | 240<br>9.44 | 24<br>0.95 | 176<br>6.92 | 145<br>5.71 | 72.7<br>2.86 | M10*50–2 | 4–M16 |
| 80<br>3 | 88.9<br>3.5 | | 250<br>9.84 | 24<br>0.95 | 184<br>7.24 | 160<br>6.30 | 85.5<br>3.37 | M10*50–2 | 8–M16 |
| 100<br>4 | 108<br>4.25 | | 266<br>10.47 | 24<br>0.95 | 218<br>8.58 | 180<br>7.09 | 104.5<br>4.11 | M12*55–2 | 8–M16 |
| 100<br>4 | 114.3<br>4.5 | | 266<br>10.47 | 24<br>0.95 | 218<br>8.58 | 180<br>7.09 | 110.5<br>4.35 | M12*55–2 | 8–M16 |
| 125<br>5 | 133<br>5.25 | | 300<br>11.81 | 24<br>0.95 | 247<br>9.72 | 210<br>8.27 | 129.2<br>5.08 | M12*65–2 | 8–M16 |
| 125<br>5 | 139.7<br>5.5 | | 300<br>11.81 | 24<br>0.95 | 247<br>9.72 | 210<br>8.27 | 135.5<br>5.33 | M12*65–2 | 8–M16 |
| 125<br>5 | 141.3<br>5.563 | | 300<br>11.81 | 24<br>0.95 | 247<br>9.72 | 210<br>8.27 | 137.4<br>5.41 | M12*65–2 | 8–M16 |
| 150<br>6 | 159<br>6.25 | | 336<br>13.22 | 24<br>0.95 | 282<br>11.10 | 240<br>9.45 | 154.5<br>6.08 | M12*65–2 | 8–M20 |
| 150<br>6 | 165.1<br>6.5 | | 336<br>13.22 | 24<br>0.95 | 282<br>11.10 | 240<br>9.45 | 163.5<br>6.43 | M12*65–2 | 8–M20 |
| 150<br>6 | 168.3<br>6.625 | | 336<br>13.22 | 24<br>0.95 | 282<br>11.10 | 240<br>9.45 | 163.5<br>6.43 | M12*65–2 | 8–M20 |
| 200<br>8 | 219.1<br>8.625 | | 395<br>15.55 | 27<br>1.06 | 335<br>13.18 | 295<br>11.61 | 214.5<br>8.44 | 3/8*70–2 | 12–M20 |
| 250<br>10 | 273<br>10.75 | | 470<br>18.50 | 27<br>1.06 | 404<br>15.90 | 355<br>13.97 | 267<br>10.51 | 3/8*70–2 | 12–M24 |

注：产品尺寸可能会因技术原因有所改动，恕不另行通知，如有疑问请征询威斯盾集团技术部
Note: The measurements of products maybe changed for the technical reason without responsibility note, please feel free to contact technical Dept.

90°弯头
90° Elbow
XGQT01

| Nominal Size mm/in | Pipe OD. mm/in | Working Pressure psi/MPa | Dimensions L mm/in |
|---|---|---|---|
| 规格 | 管子基本尺寸 | 工作压力 | 尺寸 |
| 25<br>1 | 33.7<br>1.327 | 300psi<br>2.07MPa | 57<br>2.24 |
| 32<br>11/4 | 42.4<br>1.669 | | 60<br>2.36 |
| 40<br>11/2 | 48.3<br>1.9 | | 60<br>2.36 |
| 50<br>2 | 60.3<br>2.375 | | 70<br>2.75 |
| 65<br>21/2 | 73<br>2.875 | | 76<br>3.00 |
| 65<br>21/2 | 76.1<br>3 | | 76<br>3.00 |
| 80<br>3 | 88.9<br>3.5 | | 86<br>3.38 |
| 100<br>4 | 108<br>4.25 | | 101<br>3.98 |
| 100<br>4 | 114.3<br>4.5 | | 101<br>3.98 |
| 125<br>5 | 133<br>5.25 | | 121<br>4.76 |
| 125<br>5 | 139.7<br>5.5 | | 121<br>4.76 |
| 125<br>5 | 141.3<br>5.563 | | 121<br>4.76 |
| 150<br>6 | 159<br>6.25 | | 140<br>5.51 |
| 150<br>6 | 165.1<br>6.5 | | 140<br>5.51 |
| 150<br>6 | 168.3<br>6.625 | | 140<br>5.51 |
| 200<br>8 | 219.1<br>8.625 | | 175<br>6.88 |
| 250<br>10 | 273<br>10.75 | | 188.5<br>7.42 |
| 300<br>12 | 323.9<br>12.750 | | 222.5<br>8.76 |

45°弯头
45° Elbow
XGQT02

| Nominal Size mm/in | Pipe OD. mm/in | Working Pressure psi/MPa | Dimensions L mm/in |
|---|---|---|---|
| 规格 | 管子基本尺寸 | 工作压力 | 尺寸 |
| 25<br>1 | 33.7<br>1.327 | 300psi<br>2.07MPa | 45<br>1.77 |
| 32<br>11/4 | 42.4<br>1.669 | | 45<br>1.77 |
| 40<br>11/2 | 48.3<br>1.9 | | 45<br>1.77 |
| 50<br>2 | 60.3<br>2.375 | | 51<br>2.00 |
| 65<br>21/2 | 73<br>2.875 | | 57<br>2.24 |
| 65<br>21/2 | 76.1<br>3 | | 57<br>2.24 |
| 80<br>3 | 88.9<br>3.5 | | 64<br>2.51 |
| 100<br>4 | 108<br>4.25 | | 76<br>3.00 |
| 100<br>4 | 114.3<br>4.5 | | 76<br>3.00 |
| 125<br>5 | 133<br>5.25 | | 82.5<br>3.24 |
| 125<br>5 | 139.7<br>5.5 | | 82.5<br>3.24 |
| 125<br>5 | 141.3<br>5.563 | | 82.5<br>3.24 |
| 150<br>6 | 159<br>6.25 | | 89<br>3.50 |
| 150<br>6 | 165.1<br>6.5 | | 89<br>3.50 |
| 150<br>6 | 168.3<br>6.625 | | 89<br>3.50 |
| 200<br>8 | 219.1<br>8.625 | | 108<br>4.25 |
| 250<br>10 | 273<br>10.75 | | 120.5<br>4.74 |
| 300<br>12 | 323.9<br>12.750 | | 133<br>5.23 |

注：产品尺寸可能会因技术原因有所改动，恕不另行通知，如有疑问请征询威斯盾集团技术部
Note: The measurements of products maybe changed for the technical reason without responsibility note, please feel free to contact technical Dept.

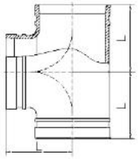

**正三通**
**Tee**
**XGQT03**

| Nominal Size mm/in | Pipe OD. mm/in | Working Pressure psi/MPa | Dimensions L mm/in |
|---|---|---|---|
| 规格 | 管子基本尺寸 | 工作压力 | 尺寸 |
| 25<br>1 | 33.7<br>1.327 | | 57<br>2.24 |
| 32<br>1¼ | 42.4<br>1.669 | | 60<br>2.36 |
| 40<br>1½ | 48.3<br>1.9 | | 60<br>2.36 |
| 50<br>2 | 60.3<br>2.375 | | 70<br>2.75 |
| 65<br>2½ | 73<br>2.875 | | 76<br>3.00 |
| 65<br>2½ | 76.1<br>3 | | 76<br>3.00 |
| 80<br>3 | 88.9<br>3.5 | | 86<br>3.38 |
| 100<br>4 | 108<br>4.25 | | 101<br>3.98 |
| 100<br>4 | 114.3<br>4.5 | 300psi<br>2.07MPa | 101<br>3.98 |
| 125<br>5 | 133<br>5.25 | | 121<br>4.76 |
| 125<br>5 | 139.7<br>5.5 | | 121<br>4.76 |
| 125<br>5 | 141.3<br>5.563 | | 121<br>4.76 |
| 150<br>6 | 159<br>6.25 | | 140<br>5.51 |
| 150<br>6 | 165.1<br>6.5 | | 140<br>5.51 |
| 150<br>6 | 168.3<br>6.625 | | 140<br>5.51 |
| 200<br>8 | 219.1<br>8.625 | | 175<br>6.88 |
| 250<br>10 | 273<br>10.75 | | 215<br>8.46 |
| 300<br>12 | 323.9<br>12.750 | | 245<br>9.64 |

注：产品尺寸可能会因技术原因有所改动，恕不另行通知，如有疑问请征询威斯盾集团技术部
Note: The measurements of products maybe changed for the technical reason without responsibility note, please feel free to contact technical Dept.

**沟槽式异径三通**
**Grooved Reducing Tee**
**XGQT04**

| Nominal Size mm/in | Pipe OD. mm/in | Working Pressure psi/MPa | Dimensions L1 mm/in | Dimensions L2 mm/in |
|---|---|---|---|---|
| 规格 | 管子基本尺寸 | 工作压力 | 尺寸 | 尺寸 |
| 50 × 25<br>2 × 1 | 60.3 × 33.7<br>2.375 × 1.315 | | 70<br>2.75 | 70<br>2.75 |
| 50 × 32<br>2 × 1¼ | 60.3 × 42.4<br>2.375 × 1.660 | | 70<br>2.75 | 70<br>2.75 |
| 50 × 40<br>2 × 1½ | 60.3 × 48.3<br>2.375 × 1.900 | | 70<br>2.75 | 70<br>2.75 |
| 65 × 32<br>2½ × 1¼ | 73.0 × 42.4<br>2.875 × 1.660 | | 76<br>3.00 | 76<br>3.00 |
| 65 × 40<br>2½ × 1½ | 73.0 × 48.3<br>2.875 × 1.900 | | 76<br>3.00 | 76<br>3.00 |
| 65 × 50<br>2½ × 2 | 73.0 × 60.3<br>2.875 × 2.375 | | 76<br>3.00 | 76<br>3.00 |
| 65 × 32<br>2½ × 1¼ | 76.1 × 42.4<br>3.000 × l.660 | | 76<br>3.00 | 76<br>3.00 |
| 65 × 40<br>2½ × 1½ | 76.1 × 48.3<br>3.000 × 1.900 | | 76<br>3.00 | 76<br>3.00 |
| 65 × 50<br>2½ × 2 | 76.1 × 60.3<br>3.000 × 2.375 | | 76<br>3.00 | 76<br>3.00 |
| 80 × 40<br>3 × 1½ | 88.9 × 48.3<br>3.500 × 1.900 | | 86<br>3.38 | 86<br>3.38 |
| 80 × 50<br>3 × 2 | 88.9 × 60.3<br>3.500 × 2.375 | | 86<br>3.38 | 86<br>3.38 |
| 80 × 65<br>3 × 2½ | 88.9 × 76.1<br>3.500 × 3.000 | | 86<br>3.38 | 86<br>3.38 |
| 100 × 65<br>4 × 2½ | 108.0 × 76.1<br>4.250 × 3.000 | | 101<br>3.98 | 101<br>3.98 |
| 100 × 80<br>4 × 3 | 108.0 × 88.9<br>4.250 × 3.500 | 300psi<br>2.07MPa | 101<br>3.98 | 101<br>3.98 |
| 100 × 50<br>4 × 2 | 114.3 × 60.3<br>4.500 × 2.375 | | 101<br>3.98 | 101<br>3.98 |
| 100 × 65<br>4 × 2½ | 114.3 × 76.1<br>4.500 × 3.000 | | 101<br>3.98 | 101<br>3.98 |
| 100 × 80<br>4 × 3 | 114.3 × 88.9<br>4.500 × 3.500 | | 101<br>3.98 | 101<br>3.98 |
| 125 × 50<br>5 × 2 | 133.0 × 60.3<br>5.250 × 2.375 | | 121<br>4.76 | 121<br>4.76 |
| 125 × 65<br>5 × 2½ | 133.0 × 76.1<br>5.250 × 3.000 | | 121<br>4.76 | 121<br>4.76 |
| 125 × 100<br>5 × 4 | 133.0 × 108.0<br>5.250 × 4.250 | | 121<br>4.76 | 121<br>4.76 |
| 125 × 100<br>5 × 4 | 133.0 × 114.3<br>5.250 × 4.500 | | 121<br>4.76 | 121<br>4.76 |
| 125 × 50<br>5 × 2 | 139.7 × 60.3<br>5.500 × 2.375 | | 121<br>4.76 | 121<br>4.76 |
| 125 × 65<br>5 × 2½ | 139.7 × 76.1<br>5.500 × 3.000 | | 121<br>4.76 | 121<br>4.76 |
| 125 × 80<br>5 × 3 | 139.7 × 88.9<br>5.500 × 3.500 | | 121<br>4.76 | 121<br>4.76 |
| 125 × 100<br>5 × 4 | 139.7 × 114.3<br>5.500 × 4.500 | | 121<br>4.76 | 121<br>4.76 |
| 125 × 50<br>5 × 2 | 141.3 × 60.3<br>5.563 × 2.375 | | 121<br>4.76 | 121<br>4.76 |
| 125 × 65<br>5 × 2½ | 141.3 × 73.0<br>5.563 × 2.875 | | 121<br>4.76 | 121<br>4.76 |

**沟槽式异径三通**
**Grooved Reducing Tee**
**XGQT04**

| Nominal Size mm/in | Pipe OD. mm/in | Working Pressure psi/MPa | Dimensions L1 mm/in | Dimensions L2 mm/in |
|---|---|---|---|---|
| 规格 | 管子基本尺寸 | 工作压力 | 尺寸 | 尺寸 |
| 125 × 65<br>5 × 2½ | 141.3 × 76.1<br>5.563 × 3.000 | | 121<br>4.76 | 121<br>4.76 |
| 125 × 80<br>5 × 3 | 141.3 × 88.9<br>5.563 × 3.500 | | 121<br>4.76 | 121<br>4.76 |
| 125 × 100<br>5 × 4 | 141.3 × 114.3<br>5.563 × 4.500 | | 121<br>4.76 | 121<br>4.76 |
| 150 × 65<br>6 × 2½ | 159.0 × 76.1<br>6.250 × 3.000 | | 140<br>5.50 | 140<br>5.50 |
| 150 × 80<br>6 × 3 | 159.0 × 88.9<br>6.250 × 3.500 | | 140<br>5.50 | 140<br>5.50 |
| 150 × 100<br>6 × 4 | 159.0 × 108.0<br>6.250 × 4.250 | | 140<br>5.50 | 140<br>5.50 |
| 150 × 100<br>6 × 4 | 159.0 × 114.3<br>6.250 × 4.500 | | 140<br>5.50 | 140<br>5.50 |
| 150 × 50<br>6 × 2 | 165.1 × 60.3<br>6.500 × 2.375 | | 140<br>5.50 | 140<br>5.50 |
| 150 × 65<br>6 × 2½ | 165.1 × 76.1<br>6.500 × 3.000 | | 140<br>5.50 | 140<br>5.50 |
| 150 × 80<br>6 × 3 | 165.1 × 88.9<br>6.500 × 3.500 | | 140<br>5.50 | 140<br>5.50 |
| 150 × 100<br>6 × 4 | 165.1 × 114.3<br>6.500 × 4.500 | | 140<br>5.50 | 140<br>5.50 |
| 150 × 125<br>6 × 5 | 165.1 × 139.7<br>6.500 × 5.500 | | 140<br>5.50 | 140<br>5.50 |
| 150 × 50<br>6 × 2 | 168.3 × 60.3<br>6.625 × 2.375 | 300psi<br>2.07MPa | 140<br>5.50 | 140<br>5.50 |
| 150 × 65<br>6 × 2½ | 168.3 × 76.1<br>6.625 × 3.000 | | 140<br>5.50 | 140<br>5.50 |
| 150 × 80<br>6 × 3 | 168.3 × 88.9<br>6.625 × 3.500 | | 140<br>5.50 | 140<br>5.50 |
| 200 × 65<br>8 × 2½ | 219.1 × 76.1<br>8.625 × 3.000 | | 175<br>6.88 | 175<br>6.88 |
| 200 × 80<br>8 × 3 | 219.1 × 88.9<br>8.625 × 3.500 | | 175<br>6.88 | 175<br>6.88 |
| 200 × 100<br>8 × 4 | 219.1 × 108.0<br>8.625 × 4.250 | | 175<br>6.88 | 175<br>6.88 |
| 200 × 100<br>8 × 4 | 219.1 × 114.3<br>8.625 × 4.500 | | 175<br>6.88 | 175<br>6.88 |
| 200 × 125<br>8 × 5 | 219.1 × 139.7<br>8.625 × 5.500 | | 175<br>6.88 | 175<br>6.88 |
| 200 × 150<br>8 × 6 | 219.1 × 159.0<br>8.625 × 6.250 | | 175<br>6.88 | 175<br>6.88 |
| 200 × 150<br>8 × 6 | 219.1 × 165.1<br>8.625 × 6.500 | | 175<br>6.88 | 175<br>6.88 |
| 200 × 150<br>8 × 6 | 219.1 × 168.3<br>8.625 × 6.625 | | 175<br>6.88 | 175<br>6.88 |
| 250 × 100<br>10 × 4 | 273.0 × 114.3<br>10.750 × 4.500 | | 215<br>8.46 | 215<br>8.46 |
| 250 × 125<br>10 × 5 | 273.0 × 139.7<br>10.750 × 5.500 | | 215<br>8.46 | 215<br>8.46 |
| 250 × 150<br>10 × 6 | 273.0 × 165.1<br>10.750 × 6.500 | | 215<br>8.46 | 215<br>8.46 |

注：产品尺寸可能会因技术原因有所改动，恕不另行通知，如有疑问请征询威斯盾集团技术部
Note: The measurements of products maybe changed for the technical reason without responsibility note, please feel free to contact technical Dept.

## Threaded reducing tee

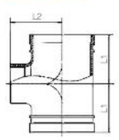


**螺纹式异径三通**
**Threaded Reducing Tee**
**XGQT04S**

| Nominal Size mm/in | Pipe OD. mm/in | Working Pressure psi/MPa | Dimensions L1 mm/in | Dimensions L2 mm/in |
|---|---|---|---|---|
| 规格 | 管子基本尺寸 | 工作压力 | 尺寸 | 尺寸 |
| 40 × 25<br>1 1/2 × 1 | 48.3 × 33.7<br>1.900 × 1.315 | | 60<br>2.36 | 60<br>2.36 |
| 40 × 32<br>1 1/2 × 1 1/4 | 48.3 × 42.4<br>1.900 × 1.660 | | 60<br>2.36 | 60<br>2.36 |
| 50 × 25<br>2 × 1 | 60.3 × 33.7<br>2.375 × 1.315 | | 70<br>2.75 | 70<br>2.75 |
| 50 × 32<br>2 × 1 1/4 | 60.3 × 42.4<br>2.375 × 1.660 | | 70<br>2.75 | 70<br>2.75 |
| 50 × 40<br>2 × 1 1/2 | 60.3 × 48.3<br>2.375 × 1.900 | | 70<br>2.75 | 70<br>2.75 |
| 65 × 25<br>2 1/2 × 1 | 73.0 × 33.7<br>2.875 × 1.315 | | 76<br>3.00 | 76<br>3.00 |
| 65 × 32<br>2 1/2 × 1 1/4 | 73.0 × 42.4<br>2.875 × 1.660 | | 76<br>3.00 | 76<br>3.00 |
| 65 × 40<br>2 1/2 × 1 1/2 | 73.0 × 48.3<br>2.875 × 1.900 | | 76<br>3.00 | 76<br>3.00 |
| 65 × 50<br>2 1/2 × 2 | 73.0 × 60.3<br>2.875 × 2.375 | | 76<br>3.00 | 76<br>3.00 |
| 65 × 25<br>2 1/2 × 1 | 76.1 × 33.7<br>3.000 × 1.315 | | 76<br>3.00 | 76<br>3.00 |
| 65 × 32<br>2 1/2 × 1 1/4 | 76.1 × 42.4<br>3.000 × 1.660 | | 76<br>3.00 | 76<br>3.00 |
| 65 × 40<br>2 1/2 × 1 1/2 | 76.1 × 48.3<br>3.000 × 1.900 | | 76<br>3.00 | 76<br>3.00 |
| 65 × 50<br>2 1/2 × 2 | 76.1 × 60.3<br>3.000 × 2.375 | | 76<br>3.00 | 76<br>3.00 |
| 80 × 25<br>3 × 1 | 88.9 × 33.7<br>3.500 × 1.315 | 300psi<br>2.07MPa | 86<br>3.38 | 86<br>3.38 |
| 80 × 32<br>3 × 1 1/4 | 88.9 × 42.4<br>3.500 × 1.660 | | 86<br>3.38 | 86<br>3.38 |
| 80 × 40<br>3 × 1 1/2 | 88.9 × 48.3<br>3.500 × 1.900 | | 86<br>3.38 | 86<br>3.38 |
| 80 × 50<br>3 × 2 | 88.9 × 60.3<br>3.500 × 2.375 | | 86<br>3.38 | 86<br>3.38 |
| 80 × 65<br>3 × 2 1/2 | 88.9 × 76.1<br>3.500 × 3.000 | | 86<br>3.38 | 86<br>3.38 |
| 100 × 65<br>4 × 2 1/2 | 108.0 × 76.1<br>4.250 × 3.000 | | 101<br>3.98 | 101<br>3.98 |
| 100 × 80<br>4 × 3 | 108.0 × 88.9<br>4.250 × 3.500 | | 101<br>3.98 | 101<br>3.98 |
| 100 × 25<br>4 × 1 | 114.3 × 33.7<br>4.500 × 1.315 | | 101<br>3.98 | 101<br>3.98 |
| 100 × 32<br>4 × 1 1/2 | 114.3 × 42.4<br>4.500 × 1.660 | | 101<br>3.98 | 101<br>3.98 |
| 100 × 40<br>4 × 1 1/2 | 114.3 × 48.3<br>4.500 × 1.900 | | 101<br>3.98 | 101<br>3.98 |
| 100 × 50<br>4 × 2 | 114.3 × 60.3<br>4.500 × 2.375 | | 101<br>3.98 | 101<br>3.98 |
| 100 × 65<br>4 × 2 1/2 | 114.3 × 76.1<br>4.500 × 3.000 | | 101<br>3.98 | 101<br>3.98 |
| 100 × 80<br>4 × 3 | 114.3 × 88.9<br>4.500 × 3.500 | | 101<br>3.98 | 101<br>3.98 |
| 125 × 25<br>5 × 1 | 139.7 × 33.7<br>5.500 × 1.315 | | 121<br>4.76 | 121<br>4.76 |

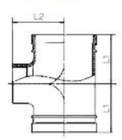


**螺纹式异径三通**
**Threaded Reducing Tee**
**XGQT04S**

| Nominal Size mm/in | Pipe OD. mm/in | Working Pressure psi/MPa | Dimensions L1 mm/in | Dimensions L2 mm/in |
|---|---|---|---|---|
| 规格 | 管子基本尺寸 | 工作压力 | 尺寸 | 尺寸 |
| 125 × 32<br>5 × 1 1/4 | 139.7 × 42.4<br>5.500 × 1.660 | | 121<br>4.76 | 121<br>4.76 |
| 125 × 40<br>5 × 1 1/2 | 139.7 × 48.3<br>5.500 × 1.900 | | 121<br>4.76 | 121<br>4.76 |
| 125 × 50<br>5 × 2 | 139.7 × 60.3<br>5.500 × 2.375 | | 121<br>4.76 | 121<br>4.76 |
| 125 × 65<br>5 × 2 1/2 | 139.7 × 76.1<br>5.500 × 3.000 | | 121<br>4.76 | 121<br>4.76 |
| 125 × 80<br>5 × 3 | 139.7 × 88.9<br>5.500 × 3.500 | | 121<br>4.76 | 121<br>4.76 |
| 125 × 25<br>5 × 1 | 141.3 × 33.7<br>5.563 × 1.315 | | 121<br>4.76 | 121<br>4.76 |
| 125 × 32<br>5 × 1 1/4 | 141.3 × 42.4<br>5.563 × 1.660 | | 121<br>4.76 | 121<br>4.76 |
| 125 × 40<br>5 × 1 1/2 | 141.3 × 48.3<br>5.563 × 1.900 | | 121<br>4.76 | 121<br>4.76 |
| 125 × 50<br>5 × 2 | 141.3 × 60.3<br>5.563 × 2.375 | | 121<br>4.76 | 121<br>4.76 |
| 125 × 65<br>5 × 2 1/2 | 141.3 × 73.0<br>5.563 × 2.875 | | 121<br>4.76 | 121<br>4.76 |
| 125 × 65<br>5 × 2 1/2 | 141.3 × 76.1<br>5.563 × 3.000 | | 121<br>4.76 | 121<br>4.76 |
| 150 × 65<br>6 × 2 1/2 | 159.0 × 76.1<br>6.250 × 3.000 | | 140<br>5.50 | 140<br>5.50 |
| 150 × 80<br>6 × 3 | 159.0 × 88.9<br>6.250 × 3.500 | | 140<br>5.50 | 140<br>5.50 |
| 150 × 25<br>6 × 1 | 165.1 × 33.7<br>6.500 × 1.315 | | 140<br>5.50 | 140<br>5.50 |
| 150 × 32<br>6 × 1 1/4 | 165.1 × 42.4<br>6.500 × 1.660 | | 140<br>5.50 | 140<br>5.50 |
| 150 × 40<br>6 × 1 1/2 | 165.1 × 48.3<br>6.500 × 1.900 | | 140<br>5.50 | 140<br>5.50 |
| 150 × 50<br>6 × 2 | 165.1 × 60.3<br>6.500 × 2.375 | | 140<br>5.50 | 140<br>5.50 |
| 150 × 65<br>6 × 2 1/2 | 165.1 × 76.1<br>6.500 × 3.000 | | 140<br>5.50 | 140<br>5.50 |
| 150 × 80<br>6 × 3 | 165.1 × 88.9<br>6.500 × 3.500 | | 140<br>5.50 | 140<br>5.50 |
| 150 × 100<br>6 × 4 | 165.1 × 114.3<br>6.500 × 4.500 | | 140<br>5.50 | 140<br>5.50 |
| 150 × 25<br>6 × 1 | 168.3 × 33.7<br>6.625 × 1.315 | | 140<br>5.50 | 140<br>5.50 |
| 150 × 32<br>6 × 1 1/4 | 168.3 × 42.4<br>6.625 × 1.660 | | 140<br>5.50 | 140<br>5.50 |
| 150 × 40<br>6 × 1 1/2 | 168.3 × 48.3<br>6.625 × 1.900 | | 140<br>5.50 | 140<br>5.50 |
| 150 × 50<br>6 × 2 | 168.3 × 60.3<br>6.625 × 2.375 | | 140<br>5.50 | 140<br>5.50 |
| 200 × 50<br>8 × 2 | 219.1 × 60.3<br>8.625 × 2.375 | | 175<br>6.88 | 175<br>6.88 |
| 200 × 65<br>8 × 2 1/2 | 219.1 × 76.1<br>8.625 × 3.000 | | 175<br>6.88 | 175<br>6.88 |
| 200 × 80<br>8 × 3 | 219.1 × 88.9<br>8.625 × 3.500 | | 175<br>6.88 | 175<br>6.88 |

注：产品尺寸可能会因技术原因有所改动，恕不另行通知，如有疑问请征询威斯盾集团技术部
Note: The measurements of products maybe changed for the technical reason without responsibility note, please feel free to contact technical Dept.



## Cross

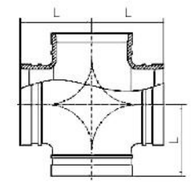


**正四通**
**Cross**
**XGQT05**

| Nominal Size mm/in | Pipe OD. mm/in | Working Pressure psi/MPa | Dimensions L mm/in |
|---|---|---|---|
| 规格 | 管子基本尺寸 | 工作压力 | 尺寸 |
| 32<br>1 1/4 | 42.4<br>1.669 | | 60<br>2.36 |
| 40<br>1 1/2 | 48.3<br>1.9 | | 60<br>2.36 |
| 50<br>2 | 60.3<br>2.375 | | 70<br>2.75 |
| 65<br>2 1/2 | 73<br>2.875 | | 76<br>3.00 |
| 65<br>2 1/2 | 76.1<br>3 | | 76<br>3.00 |
| 80<br>3 | 88.9<br>3.5 | | 86<br>3.38 |
| 100<br>4 | 108<br>4.25 | | 101<br>3.98 |
| 100<br>4 | 114.3<br>4.5 | | 101<br>3.98 |
| 125<br>5 | 133<br>5.25 | 300psi<br>2.07MPa | 121<br>4.76 |
| 125<br>5 | 139.7<br>5.5 | | 121<br>4.76 |
| 125<br>5 | 141.3<br>5.563 | | 121<br>4.76 |
| 150<br>6 | 159<br>6.25 | | 140<br>5.51 |
| 150<br>6 | 165.1<br>6.5 | | 140<br>5.51 |
| 150<br>6 | 168.3<br>6.625 | | 140<br>5.51 |
| 200<br>8 | 219.1<br>8.625 | | 175<br>6.88 |
| 250<br>10 | 273<br>10.75 | | 215<br>8.46 |
| 300<br>12 | 323.9<br>12.750 | | 245<br>9.64 |

注：产品尺寸可能会因技术原因有所改动，恕不另行通知，如有疑问请征询威斯盾集团技术部
Note: The measurements of products maybe changed for the technical reason without responsibility note, please feel free to contact technical Dept.

## Grooved/Threaded reducing Cross

**沟槽式异径四通**
**Grooved Reducing Cross**
**XGQT051**

| Nominal Size mm/in 规格 | Pipe OD. mm/in 管子基本尺寸 | Working Pressure psi/MPa 工作压力 | Dimensions L1 mm/in 尺寸 | Dimensions L2 mm/in 尺寸 |
|---|---|---|---|---|
| 100×50<br>4×2 | 114.3×60.3<br>4.500×2.375 | | 101<br>3.98 | 101<br>3.98 |
| 100×65<br>4×2 1/2 | 114.3×76.1<br>4.500×3.000 | | 101<br>3.98 | 101<br>3.98 |
| 100×80<br>4×3 | 114.3×88.9<br>5.563×3.500 | | 101<br>3.98 | 101<br>3.98 |
| 125×100<br>5×4 | 139.7×114.3<br>5.500×4.500 | | 121<br>4.76 | 121<br>4.76 |
| 150×100<br>6×4 | 165.1×114.3<br>6.500×4.500 | 300psi<br>2.07MPa | 140<br>5.50 | 140<br>5.50 |
| 150×50<br>6×2 | 168.3×60.3<br>6.625×2.375 | | 140<br>5.50 | 140<br>5.50 |
| 150×65<br>6×2 1/2 | 168.3×76.1<br>6.625×3.000 | | 140<br>5.50 | 140<br>5.50 |
| 150×80<br>6×3 | 168.3×88.9<br>6.625×3.500 | | 140<br>5.50 | 140<br>5.50 |
| 150×100<br>6×4 | 168.3×114.3<br>6.625×4.500 | | 140<br>5.50 | 140<br>5.50 |

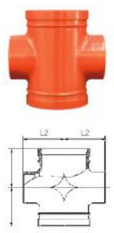


**螺纹式异径四通**
**Threaded Reducing Cross**
**XGQT051S**

| Nominal Size mm/in 规格 | Pipe OD. mm/in 管子基本尺寸 | Working Pressure psi/MPa 工作压力 | Dimensions L1 mm/in 尺寸 | Dimensions L2 mm/in 尺寸 |
|---|---|---|---|---|
| 100×25<br>4×1 | 114.3×33.7<br>4.500×1.315 | | 101<br>3.98 | 101<br>3.98 |
| 100×32<br>4×1 1/4 | 114.3×42.4<br>4.500×1.660 | | 101<br>3.98 | 101<br>3.98 |
| 100×40<br>4×1 1/2 | 114.3×48.3<br>4.500×1.900 | | 101<br>3.98 | 101<br>3.98 |
| 100×50<br>4×2 | 114.3×60.3<br>4.500×2.375 | | 101<br>3.98 | 101<br>3.98 |
| 100×65<br>4×2 1/2 | 114.3×76.1<br>4.500×3.000 | | 101<br>3.98 | 101<br>3.98 |
| 100×80<br>4×3 | 114.3×88.9<br>4.500×3.500 | | 101<br>3.98 | 101<br>3.98 |
| 125×32<br>5×1 1/4 | 139.7×42.4<br>5.500×1.660 | | 121<br>4.76 | 121<br>4.76 |
| 125×40<br>5×1 1/2 | 139.7×48.3<br>5.500×1.900 | | 121<br>4.76 | 121<br>4.76 |
| 125×50<br>5×2 | 139.7×60.3<br>5.500×2.375 | 300psi<br>2.07MPa | 121<br>4.76 | 121<br>4.76 |
| 125×65<br>5×2 1/2 | 139.7×76.1<br>5.500×3.000 | | 121<br>4.76 | 121<br>4.76 |
| 125×80<br>5×3 | 139.7×88.9<br>5.500×3.500 | | 121<br>4.76 | 121<br>4.76 |
| 150×25<br>6×1 | 165.1×33.7<br>6.500×1.315 | | 140<br>5.50 | 140<br>5.50 |
| 150×32<br>6×1 1/4 | 165.1×42.4<br>6.500×1.660 | | 140<br>5.50 | 140<br>5.50 |
| 150×40<br>6×1 1/2 | 165.1×48.3<br>6.500×1.900 | | 140<br>5.50 | 140<br>5.50 |
| 150×50<br>6×2 | 165.1×60.3<br>6.500×2.375 | | 140<br>5.50 | 140<br>5.50 |
| 150×65<br>6×2 1/2 | 165.1×76.1<br>6.500×3.000 | | 140<br>5.50 | 140<br>5.50 |
| 150×80<br>6×3 | 165.1×88.9<br>6.500×3.500 | | 140<br>5.50 | 140<br>5.50 |

注：产品尺寸可能会因技术原因有所改动，恕不另行通知，如有疑问请征询威斯盾集团技术部
Note: The measurements of products maybe changed for the technical reason without responsibility note, please feel free to contact technical Dept.



## Cap

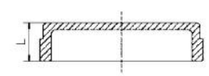


**盲片**
**Cap**
**XGQT06**

| Nominal Size mm/in 规格 | Pipe OD. mm/in 管子基本尺寸 | Working Pressure psi/MPa 工作压力 | Dimensions L mm/in 尺寸 |
|---|---|---|---|
| 25<br>1 | 33.7<br>1.327 | | 25<br>0.98 |
| 32<br>11/4 | 42.4<br>1.669 | | 25<br>0.98 |
| 40<br>11/2 | 48.3<br>1.9 | | 25<br>0.98 |
| 50<br>2 | 60.3<br>2.375 | | 25<br>0.98 |
| 65<br>21/2 | 73<br>2.875 | | 25<br>0.98 |
| 65<br>21/2 | 76.1<br>3 | | 25<br>0.98 |
| 80<br>3 | 88.9<br>3.5 | | 26<br>10.2 |
| 100<br>4 | 108<br>4.25 | | 26<br>10.2 |
| 100<br>4 | 114.3<br>4.5 | 300psi<br>2.07MPa | 26<br>10.2 |
| 125<br>5 | 133<br>5.25 | | 26<br>10.2 |
| 125<br>5 | 139.7<br>5.5 | | 26<br>10.2 |
| 125<br>5 | 141.3<br>5.563 | | 26<br>10.2 |
| 150<br>6 | 159<br>6.25 | | 26<br>10.2 |
| 150<br>6 | 165.1<br>6.5 | | 26<br>10.2 |
| 150<br>6 | 168.3<br>6.625 | | 26<br>10.2 |
| 200<br>8 | 219.1<br>8.625 | | 30<br>1.18 |
| 250<br>10 | 273<br>10.75 | | 32<br>1.25 |
| 300<br>12 | 323.9<br>12.750 | | 32<br>1.25 |

注：产品尺寸可能会因技术原因有所改动，恕不另行通知，如有疑问请征询威斯盾集团技术部
Note: The measurements of products maybe changed for the technical reason without responsibility note, please feel free to contact technical Dept.

**沟槽式大小头**
**Grooved Concentric Reducdr**
**XGQT07**

| Nominal Size mm/in 规格 | Pipe OD. mm/in 管子基本尺寸 | Working Pressure psi/MPa 工作压力 | Dimensions L mm/in 尺寸 |
|---|---|---|---|
| 32 × 25<br>1¼ × 1 | 42.4 × 33.7<br>1.660 × 1.315 | 300psi<br>2.07MPa | 64<br>2.51 |
| 40 × 25<br>1½ × 1 | 48.3 × 33.7<br>1.900 × 1.315 | | 64<br>2.51 |
| 40 × 32<br>1½ × 1¼ | 48.3 × 42.4<br>1.900 × 1.660 | | 64<br>2.51 |
| 50 × 25<br>2 × 1 | 60.3 × 33.7<br>2.375 × 1.315 | | 64<br>2.51 |
| 50 × 32<br>2 × 1¼ | 60.3 × 42.4<br>2.375 × 1.660 | | 64<br>2.51 |
| 50 × 40<br>2 × 1½ | 60.3 × 48.3<br>2.375 × 1.900 | | 64<br>2.51 |
| 65 × 25<br>2½ × 1 | 73.0 × 33.7<br>2.875 × 1.315 | | 64<br>2.51 |
| 65 × 32<br>2½ × 1¼ | 73.0 × 42.4<br>2.875 × 1.660 | | 64<br>2.51 |
| 65 × 40<br>2½ × 1½ | 73.0 × 48.3<br>2.875 × 1.900 | | 64<br>2.51 |
| 65 × 50<br>2½ × 2 | 73.0 × 60.3<br>2.875 × 2.375 | | 64<br>2.51 |
| 65 × 32<br>2½ × 1¼ | 76.1 × 42.4<br>3.000 × 1.660 | | 64<br>2.51 |
| 65 × 40<br>2½ × 1½ | 76.1 × 48.3<br>3.000 × 1.900 | | 64<br>2.51 |
| 65 × 50<br>2½ × 2 | 76.1 × 60.3<br>3.000 × 2.375 | | 64<br>2.51 |
| 80 × 32<br>3 × 1¼ | 88.9 × 42.4<br>3.500 × 1.660 | | 64<br>2.51 |
| 80 × 40<br>3 × 1½ | 88.9 × 48.3<br>3.500 × 1.900 | | 64<br>2.51 |
| 80 × 50<br>3 × 2 | 88.9 × 60.3<br>3.500 × 2.375 | | 64<br>2.51 |
| 80 × 65<br>3 × 2½ | 88.9 × 76.1<br>3.500 × 3.000 | | 64<br>2.51 |
| 100 × 65<br>4 × 2½ | 108.0 × 76.1<br>4.250 × 3.000 | | 76<br>2.99 |
| 100 × 80<br>4 × 3 | 108.0 × 88.9<br>4.250 × 3.500 | | 76<br>2.99 |
| 100 × 32<br>4 × 1¼ | 114.3 × 42.4<br>4.500 × 1.660 | | 76<br>2.99 |

**沟槽式大小头**
**Grooved Concentric Reducdr**
**XGQT07**

| Nominal Size mm/in 规格 | Pipe OD. mm/in 管子基本尺寸 | Working Pressure psi/MPa 工作压力 | Dimensions L mm/in 尺寸 |
|---|---|---|---|
| 100 × 40<br>4 × 1½ | 114.3 × 48.3<br>4.500 × 1.900 | 300psi<br>2.07MPa | 76<br>2.99 |
| 100 × 50<br>4 × 2 | 114.3 × 60.3<br>4.500 × 2.375 | | 76<br>2.99 |
| 100 × 65<br>4 × 2½ | 114.3 × 76.1<br>4.500 × 3.000 | | 76<br>2.99 |
| 100 × 80<br>4 × 3 | 114.3 × 88.9<br>4.500 × 3.500 | | 76<br>2.99 |
| 125 × 50<br>5 × 2 | 139.7 × 60.3<br>5.500 × 2.375 | | 89<br>3.50 |
| 125 × 65<br>5 × 2½ | 139.7 × 76.1<br>5.500 × 3.000 | | 89<br>3.50 |
| 125 × 80<br>5 × 3 | 139.7 × 88.9<br>5.500 × 3.500 | | 89<br>3.50 |
| 125 × 100<br>5 × 4 | 139.7 × 114.3<br>5.500 × 4.500 | | 89<br>3.50 |
| 125 × 50<br>5 × 2 | 141.3 × 60.3<br>5.563 × 2.375 | | 89<br>3.50 |
| 125 × 65<br>5 × 2½ | 141.3 × 76.1<br>5.563 × 3.000 | | 89<br>3.50 |
| 125 × 80<br>5 × 3 | 141.3 × 88.9<br>5.563 × 3.500 | | 89<br>3.50 |
| 125 × 100<br>5 × 4 | 141.3 × 114.3<br>5.563 × 4.500 | | 89<br>3.50 |
| 150 × 50<br>6 × 2 | 159.0 × 60.3<br>6.250 × 2.375 | | 102<br>4.01 |
| 150 × 65<br>6 × 2½ | 159.0 × 76.1<br>6.250 × 3.000 | | 102<br>4.01 |
| 150 × 80<br>6 × 3 | 159.0 × 88.9<br>6.250 × 3.500 | | 102<br>4.01 |
| 150 × 100<br>6 × 4 | 159.0 × 108.0<br>6.250 × 4.250 | | 102<br>4.01 |
| 150 × 100<br>6 × 4 | 159.0 × 114.3<br>6.250 × 4.500 | | 102<br>4.01 |
| 150 × 125<br>6 × 5 | 159.0 × 133.0<br>6.250 × 5.250 | | 102<br>4.01 |
| 150 × 125<br>6 × 5 | 159.0 × 139.7<br>6.250 × 5.500 | | 102<br>4.01 |
| 150 × 50<br>6 × 2 | 165.1 × 60.3<br>6.500 × 2.375 | | 102<br>4.01 |

注：产品尺寸可能会因技术原因有所改动，恕不另行通知，如有疑问请征询威斯盾集团技术部
Note: The measurements of products maybe changed for the technical reason without responsibility note, please feel free to contact technical Dept.

**沟槽式大小头**
**Grooved Concentric Reducdr**
**XGQT07**

| Nominal Size mm/in 规格 | Pipe OD. mm/in 管子基本尺寸 | Working Pressure psi/MPa 工作压力 | Dimensions L mm/in 尺寸 |
|---|---|---|---|
| 150 × 65<br>6 × 2½ | 165.1 × 76.1<br>6.500 × 3.000 | 300psi<br>2.07MPa | 102<br>4.01 |
| 150 × 80<br>6 × 3 | 165.1 × 88.9<br>6.500 × 3.500 | | 102<br>4.01 |
| 150 × 100<br>6 × 4 | 165.1 × 114.3<br>6.500 × 4.500 | | 102<br>4.01 |
| 150 × 125<br>6 × 5 | 165.1 × 139.7<br>6.500 × 5.500 | | 102<br>4.01 |
| 150 × 50<br>6 × 2 | 168.3 × 60.3<br>6.625 × 2.375 | | 102<br>4.01 |
| 150 × 65<br>6 × 2½ | 168.3 × 76.1<br>6.625 × 3.000 | | 102<br>4.01 |
| 150 × 80<br>6 × 3 | 168.3 × 88.9<br>6.625 × 3.500 | | 102<br>4.01 |
| 150 × 100<br>6 × 4 | 168.3 × 114.3<br>6.625 × 4.500 | | 102<br>4.01 |
| 150 × 80<br>6 × 5 | 168.3 × 139.7<br>6.625 × 5.500 | | 102<br>4.01 |
| 200 × 50<br>8 × 2 | 219.1 × 60.3<br>8.625 × 2.375 | | 127<br>5 |
| 200 × 65<br>8 × 2½ | 219.1 × 76.1<br>8.625 × 3.000 | | 127<br>5 |
| 200 × 80<br>8 × 3 | 219.1 × 88.9<br>8.625 × 3.500 | | 127<br>5 |
| 200 × 100<br>8 × 4 | 219.1 × 108.0<br>8.625 × 4.250 | | 127<br>5 |
| 200 × 100<br>8 × 4 | 219.1 × 114.3<br>8.625 × 4.500 | | 127<br>5 |
| 200 × 125<br>8 × 5 | 219.1 × 139.7<br>8.625 × 5.500 | | 127<br>5 |
| 200 × 150<br>8 × 6 | 219.1 × 159.0<br>8.625 × 6.250 | | 127<br>5 |
| 200 × 150<br>8 × 6 | 219.1 × 165.1<br>8.625 × 6.500 | | 127<br>5 |
| 200 × 150<br>8 × 6 | 219.1 × 168.3<br>8.625 × 6.625 | | 127<br>5 |

**螺纹式大小头**
**Threaded Concentric Reducdr**
**XGQT07S**

| Nominal Size mm/in 规格 | Pipe OD. mm/in 管子基本尺寸 | Working Pressure psi/MPa 工作压力 | Dimensions L mm/in 尺寸 |
|---|---|---|---|
| 32 × 25<br>1¼ × 1 | 42.4 × 33.7<br>1.660 × 1.315 | 300psi<br>2.07MPa | 64<br>2.51 |
| 40 × 32<br>1½ × 1¼ | 48.3 × 42.4<br>1.900 × 1.660 | | 64<br>2.51 |
| 50 × 25<br>2 × 1 | 60.3 × 33.7<br>2.375 × 1.315 | | 64<br>2.51 |
| 50 × 32<br>2 × 1¼ | 60.3 × 42.4<br>2.375 × 1.660 | | 64<br>2.51 |
| 50 × 40<br>2 × 1½ | 60.3 × 48.3<br>2.375 × 1.900 | | 64<br>2.51 |
| 65 × 25<br>2½ × 1 | 73.0 × 33.7<br>2.875 × 1.315 | | 64<br>2.51 |
| 65 × 32<br>2½ × 1¼ | 73.0 × 42.4<br>2.875 × 1.660 | | 64<br>2.51 |
| 65 × 40<br>2½ × 1½ | 73.0 × 48.3<br>2.875 × 1.900 | | 64<br>2.51 |
| 65 × 50<br>2½ × 2 | 73.0 × 60.3<br>2.875 × 2.375 | | 64<br>2.51 |
| 65 × 25<br>2½ × 1 | 76.1 × 33.7<br>3.000 × 1.315 | | 64<br>2.51 |
| 65 × 32<br>2½ × 1¼ | 76.1 × 42.4<br>3.000 × 1.660 | | 64<br>2.51 |
| 65 × 40<br>2½ × 1½ | 76.1 × 48.3<br>3.000 × 1.900 | | 64<br>2.51 |
| 65 × 50<br>2½ × 2 | 76.1 × 60.3<br>3.000 × 2.375 | | 64<br>2.51 |
| 80 × 25<br>3 × 1 | 88.9 × 33.7<br>3.500 × 1.315 | | 64<br>2.51 |
| 80 × 32<br>3 × 1¼ | 88.9 × 42.4<br>3.500 × 1.660 | | 64<br>2.51 |
| 80 × 40<br>3 × 1½ | 88.9 × 48.3<br>3.500 × 1.900 | | 64<br>2.51 |
| 80 × 50<br>3 × 2 | 88.9 × 60.3<br>3.500 × 2.375 | | 64<br>2.51 |
| 80 × 65<br>3 × 2½ | 88.9 × 76.1<br>3.500 × 3.000 | | 64<br>2.51 |
| 100 × 25<br>4 × 1 | 108.0 × 33.7<br>4.250 × 1.315 | | 76<br>2.99 |
| 100 × 32<br>4 × 1¼ | 108.0 × 42.4<br>4.250 × 1.660 | | 76<br>2.99 |
| 100 × 40<br>4 × 1½ | 108.0 × 48.3<br>4.250 × 1.900 | | 76<br>2.99 |
| 100 × 50<br>4 × 2 | 108.0 × 60.3<br>4.250 × 2.375 | | 76<br>2.99 |
| 100 × 65<br>4 × 2½ | 108.0 × 76.1<br>4.250 × 3.000 | | 76<br>2.99 |
| 100 × 80<br>4 × 3 | 108.0 × 88.9<br>4.250 × 3.500 | | 76<br>2.99 |

注：产品尺寸可能会因技术原因有所改动，恕不另行通知，如有疑问请征询威斯盾集团技术部
Note: The measurements of products maybe changed for the technical reason without responsibility note, please feel free to contact technical Dept.

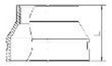

螺纹式大小头
Threaded Concentric Reducdr
XGQT07S

| Nominal Size mm/in 规格 | Pipe OD. mm/in 管子基本尺寸 | Working Pressure psi/MPa 工作压力 | Dimensions L mm/in 尺寸 |
|---|---|---|---|
| 100 × 25<br>4 × 1 | 114.3 × 33.7<br>4.500 × 1.315 | 300psi<br>2.07MPa | 76<br>2.99 |
| 100 × 32<br>4 × 1¼ | 114.3 × 42.4<br>4.500 × 1.660 | | 76<br>2.99 |
| 100 × 40<br>4 × 1½ | 114.3 × 48.3<br>4.500 × 1.900 | | 76<br>2.99 |
| 100 × 50<br>4 × 2 | 114.3 × 60.3<br>4.500 × 2.375 | | 76<br>2.99 |
| 100 × 65<br>4 × 2½ | 114.3 × 76.1<br>4.500 × 3.000 | | 76<br>2.99 |
| 100 × 80<br>4 × 3 | 114.3 × 88.9<br>4.500 × 3.500 | | 76<br>2.99 |
| 125 × 25<br>5 × 1 | 133.0 × 33.7<br>5.250 × 1.315 | | 89<br>3.50 |
| 125 × 32<br>5 × 1¼ | 133.0 × 42.4<br>5.250 × 1.660 | | 89<br>3.50 |
| 125 × 40<br>5 × 1½ | 133.0 × 48.3<br>5.250 × 1.900 | | 89<br>3.50 |
| 125 × 50<br>5 × 2 | 133.0 × 60.3<br>5.250 × 2.375 | | 89<br>3.50 |
| 125 × 25<br>5 × 1 | 139.7 × 33.7<br>5.500 × 1.315 | | 89<br>3.50 |
| 125 × 32<br>5 × 1¼ | 139.7 × 42.4<br>5.500 × 1.660 | | 89<br>3.50 |
| 125 × 40<br>5 × 1½ | 139.7 × 48.3<br>5.500 × 1.900 | | 89<br>3.50 |
| 125 × 50<br>5 × 2 | 139.7 × 60.3<br>5.500 × 2.375 | | 89<br>3.50 |
| 125 × 65<br>5 × 2½ | 139.7 × 76.1<br>5.500 × 3.000 | | 89<br>3.50 |
| 125 × 80<br>5 × 3 | 139.7 × 88.9<br>5.500 × 3.500 | | 89<br>3.50 |
| 125 × 100<br>5 × 4 | 139.7 × 114.3<br>5.500 × 4.500 | | 89<br>3.50 |
| 125 × 25<br>5 × 1 | 141.3 × 33.7<br>5.563 × 1.315 | | 89<br>3.50 |
| 125 × 32<br>5 × 1¼ | 141.3 × 42.4<br>5.563 × 1.660 | | 89<br>3.50 |
| 125 × 40<br>5 × 1½ | 141.3 × 48.3<br>5.563 × 1.900 | | 89<br>3.50 |
| 125 × 50<br>5 × 2 | 141.3 × 60.3<br>5.563 × 2.375 | | 89<br>3.50 |
| 125 × 65<br>5 × 2½ | 141.3 × 76.1<br>5.563 × 3.000 | | 89<br>3.50 |
| 125 × 80<br>5 × 3 | 141.3 × 88.9<br>5.563 × 3.500 | | 89<br>3.50 |
| 150 × 25<br>6 × 1 | 159.0 × 33.7<br>6.250 × 1.315 | | 102<br>4.01 |

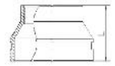

螺纹式大小头
Threaded Concentric Reducdr
XGQT07S

| Nominal Size mm/in 规格 | Pipe OD. mm/in 管子基本尺寸 | Working Pressure psi/MPa 工作压力 | Dimensions L mm/in 尺寸 |
|---|---|---|---|
| 150 × 32<br>6 × 1¼ | 159.0 × 42.4<br>6.250 × 1.660 | 300psi<br>2.07MPa | 102<br>4.01 |
| 150 × 40<br>6 × 1½ | 159.0 × 48.3<br>6.250 × 1.900 | | 102<br>4.01 |
| 150 × 50<br>6 × 2 | 159.0 × 60.3<br>6.250 × 2.375 | | 102<br>4.01 |
| 150 × 65<br>6 × 2½ | 159.0 × 76.1<br>6.250 × 3.000 | | 102<br>4.01 |
| 150 × 80<br>6 × 3 | 159.0 × 88.9<br>6.250 × 3.500 | | 102<br>4.01 |
| 150 × 25<br>6 × 1 | 165.1 × 33.7<br>6.500 × 1.315 | | 102<br>4.01 |
| 150 × 32<br>6 × 1¼ | 165.1 × 42<br>6.500 × 1.660 | | 102<br>4.01 |
| 150 × 40<br>6 × 1½ | 165.1 × 48.3<br>6.500 × 1.900 | | 102<br>4.01 |
| 150 × 50<br>6 × 2 | 165.1 × 60.3<br>6.500 × 2.375 | | 102<br>4.01 |
| 150 × 65<br>6 × 2½ | 165.1 × 76.1<br>6.500 × 3.000 | | 102<br>4.01 |
| 150 × 80<br>6 × 3 | 165.1 × 88.9<br>6.500 × 3.500 | | 102<br>4.01 |
| 150 × 100<br>6 × 4 | 165.1 × 114.3<br>6.500 × 4.500 | | 102<br>4.01 |
| 150 × 25<br>6 × 1 | 168.3 × 33.7<br>6.625 × 1.315 | | 102<br>4.01 |
| 150 × 32<br>6 × 1¼ | 168.3 × 42.4<br>6.625 × 1.660 | | 102<br>4.01 |
| 150 × 40<br>6 × 1½ | 168.3 × 48.3<br>6.625 × 1.900 | | 102<br>4.01 |
| 150 × 50<br>6 × 2 | 168.3 × 60.3<br>6.625 × 2.375 | | 102<br>4.01 |
| 200 × 25<br>8 × 1 | 219.1 × 33.7<br>8.625 × 1.315 | | 127<br>5 |
| 200 × 32<br>8 × 1¼ | 219.1 × 42.4<br>8.625 × 1.660 | | 127<br>5 |
| 200 × 40<br>8 × 1½ | 219.1 × 48.3<br>8.625 × 1.900 | | 127<br>5 |
| 200 × 50<br>8 × 2 | 219.1 × 60.3<br>8.625 × 2.375 | | 127<br>5 |
| 200 × 65<br>8 × 2½ | 219.1 × 76.1<br>8.625 × 3.000 | | 127<br>5 |
| 200 × 80<br>8 × 3 | 219.1 × 88.9<br>8.625 × 3.500 | | 127<br>5 |
| 200 × 100<br>8 × 4 | 219.1 × 114.3<br>8.625 × 4.500 | | 127<br>5 |

注：产品尺寸可能会因技术原因有所改动，恕不另行通知，如有疑问请征询威斯盾集团技术部
Note: The measurements of products maybe changed for the technical reason without responsibility note, please feel free to contact technical Dept.





## ANSI Class 150

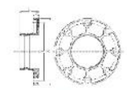

转换法兰
Adaptor Flange
XGQT08

| Nominal Size mm/in 规格 | Pipe OD. mm/in 管子基本尺寸 | Working Pressure psi/MPa 工作压力 | Dimensions mm/in 尺寸 L mm/in | X mm/in | Y mm/in | Z mm/in | Bolt Size No.–Size mm 螺栓 |
|---|---|---|---|---|---|---|---|
| 50<br>2 | 60.3<br>2.375 | 300psi<br>2.07MPa | 60<br>2.362 | 160<br>6.30 | 120.7<br>4.75 | 15<br>0.59 | 4–5/8 |
| 65<br>21/2 | 73<br>2.875 | | 60<br>2.362 | 180<br>7.08 | 139.7<br>5.50 | 15<br>0.59 | 4–5/8 |
| 80<br>3 | 88.9<br>3.5 | | 65<br>2.559 | 200<br>7.87 | 152.5<br>6.00 | 15<br>0.59 | 8–5/8 |
| 100<br>4 | 114.3<br>4.5 | | 70<br>2.756 | 228<br>8.97 | 190.5<br>7.50 | 16<br>0.63 | 8–5/8 |
| 100<br>4 | 141<br>4.5 | | 70<br>2.756 | 250<br>9.84 | 216<br>8.50 | 17<br>0.67 | 8–5/8 |
| 150<br>6 | 168.3<br>6.625 | | 70<br>2.756 | 282<br>11.10 | 241.5<br>9.50 | 17<br>0.67 | 8–3/4 |
| 200<br>8 | 219.1<br>8.625 | | 75<br>2.952 | 340<br>13.39 | 298.5<br>11.75 | 19<br>0.74 | 8–3/4 |
| 250<br>10 | 273<br>10.75 | | 85<br>3.346 | 405<br>15.94 | 362<br>14.25 | 21<br>0.82 | 12–7/8 |
| 300<br>12 | 323.9<br>12.750 | | 85<br>3.346 | 482<br>18.97 | 432<br>17.00 | 22<br>0.86 | 12–7/8 |

## PN16

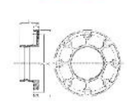

转换法兰
Adaptor Flange
XGQT08

| Nominal Size mm/in 规格 | Pipe OD. mm/in 管子基本尺寸 | Working Pressure psi/MPa 工作压力 | Dimensions mm/in 尺寸 L mm/in | X mm/in | Y mm/in | Z mm/in | Bolt Size No.–Size mm 螺栓 |
|---|---|---|---|---|---|---|---|
| 50<br>2 | 60.3<br>2.375 | 232psi<br>1.6MPa | 65<br>2.559 | 165<br>6.50 | 125<br>4.92 | 16<br>0.63 | 4–M16 |
| 65<br>21/2 | 76.1<br>3 | | 65<br>2.559 | 185<br>7.28 | 145<br>5.70 | 16<br>0.63 | 4–M16 |
| 80<br>3 | 88.9<br>3.5 | | 65<br>2.559 | 200<br>7.87 | 160<br>6.29 | 16<br>0.63 | 8–M16 |
| 100<br>4 | 108<br>4.25 | | 70<br>2.756 | 220<br>8.66 | 180<br>7.08 | 16<br>0.63 | 8–M16 |
| 100<br>4 | 114.3<br>4.5 | | 70<br>2.756 | 220<br>8.66 | 180<br>7.08 | 16<br>0.63 | 8–M16 |
| 125<br>5 | 133<br>5.25 | | 70<br>2.756 | 250<br>9.84 | 210<br>8.26 | 18<br>0.71 | 8–M16 |
| 125<br>5 | 139.7<br>5.5 | | 70<br>2.756 | 250<br>9.84 | 210<br>8.26 | 18<br>0.71 | 8–M16 |
| 150<br>6 | 159<br>6.25 | | 70<br>2.756 | 282<br>11.10 | 240<br>9.44 | 18<br>0.71 | 8–M20 |
| 150<br>6 | 165.1<br>6.5 | | 70<br>2.756 | 282<br>11.10 | 240<br>9.44 | 18<br>0.71 | 8–M20 |
| 150<br>6 | 168.3<br>6.625 | | 70<br>2.756 | 282<br>11.10 | 240<br>9.44 | 18<br>0.71 | 8–M20 |
| 200<br>8 | 219.1<br>8.625 | | 80<br>3.150 | 340<br>13.39 | 295<br>11.61 | 19<br>0.74 | 12–M20 |
| 250<br>10 | 273<br>10.75 | | 85<br>3.346 | 405<br>15.94 | 355<br>13.97 | 21<br>0.82 | 12–M24 |
| 300<br>12 | 323.9<br>12.750 | | 90<br>3.543 | 460<br>18.11 | 410<br>16.14 | 24<br>0.94 | 12–M24 |

注：产品尺寸可能会因技术原因有所改动，恕不另行通知，如有疑问请征询威斯盾集团技术部
Note: The measurements of products maybe changed for the technical reason without responsibility note, please feel free to contact technical Dept.

WEIZIDOM

www.wsdsolution.com
www.wsdvalves.com

# Fire Fighting Valve

WEIZIDOM GROUP



## WD-371X/WD-371Y Butterfly Valve

Butterfly Valve c/w Signal Gearbox-Wafer End

### Technical Features

- Flange Standard: ANSI 125/150, DIN 2501 PN10/16
- Connection: Wafer End
- Sizes: 2", 2$^{1}$/2", 3", 4", 5", 6", 8", 10",12"
- Approvals: UL, CUL, FM, NSF/ANSI 61 & NSF / ANSI 372
- Maximum Working Pressure: 300 PSI (Maximum Testing Pressure: 600 PSI) conforms to UI1091 & ULC/ORD–C1091 & FM 1112
- Maximum Working Temperature: 80℃ /176°F
- Application: Indoor & Outdoor Use, Fire inflow water, drain pipe, high–rising building fire fighting system, industrial factory building fire protection system.
- Coating Details: Epoxy coated interior and exterior by Electrostatic Spray or coating upon request
- Disc: Ductile Iron EPDM Rubber Encapsulated
- Top Flange Standard: ISO 5211
- Certified lead–free by NSF /ANSI 61 & NSF/ANSI 372 is available

### Valve Material List

| No. | Description | Material |
|---|---|---|
| 1 | Upper Shaft Sealing Nut | WCB |
| 2 | Shaft Seal | EPDM |
| 3 | Body | Ductile Iron |
| 4 | Upper Shaft | 416 Stainless Steel |
| 5 | Disc+Rubber Seat | Ductile Iron+EPDM |
| 6 | Lower Shaft | 416 Stainless Steel |
| 7 | Lower Shaft Sealing Nut | WCB |
| 8 | End Face Seal | EPDM |
| 9 | Stem Bushing | PTFE/C95400 |
| 10 | O–Ring | EPDM |
| 11 | Gearbox | |

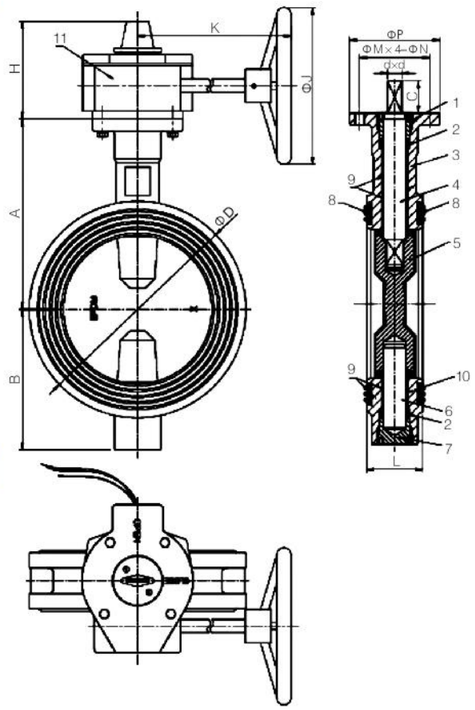


### Dimensions

| Size | A | B | C | D | H | K | | J | P | M | N | d | L |
|---|---|---|---|---|---|---|---|---|---|---|---|---|---|
| 2" | 110 | 85 | 32 | 100 | 111 | 153 | 218 | 152 | 90 | 70 | 9 | 10 | 42 |
| 2$^{1}$/2" | 125 | 95 | 32 | 112 | 111 | 153 | 218 | 152 | 90 | 70 | 9 | 10 | 44.2 |
| 3" | 140 | 100 | 32 | 120 | 111 | 153 | 218 | 152 | 90 | 70 | 9 | 11 | 45.3 |
| 4" | 160 | 100 | 32 | 161 | 111 | 153 | 218 | 152 | 90 | 70 | 9 | 14 | 52 |
| 5" | 170 | 125 | 32 | 182 | 111 | 153 | 218 | 152 | 90 | 70 | 9 | 14 | 54.4 |
| 6" | 190 | 140 | 32 | 216 | 111 | 153 | 218 | 200 | 90 | 70 | 9 | 16 | 55.8 |
| 8" | 230 | 175 | 32 | 260 | 126 | 210 | 232 | 300 | 125 | 102 | 12 | 19 | 60.5 |
| 10" | 260 | 200 | 45 | 320 | 126 | 210 | 232 | 300 | 125 | 102 | 12 | 24 | 66.5 |
| 12" | 300 | 240 | 45 | 375 | 161 | 249 | | 350 | 150 | 125 | 14 | 26 | 76.9 |

### 3D Pictures

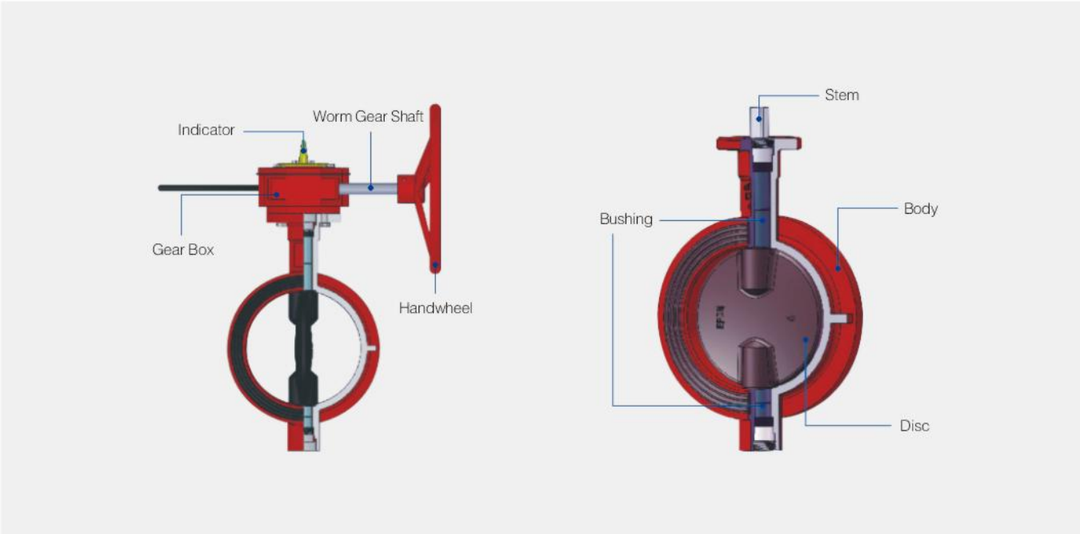


### Gearbox Drawing

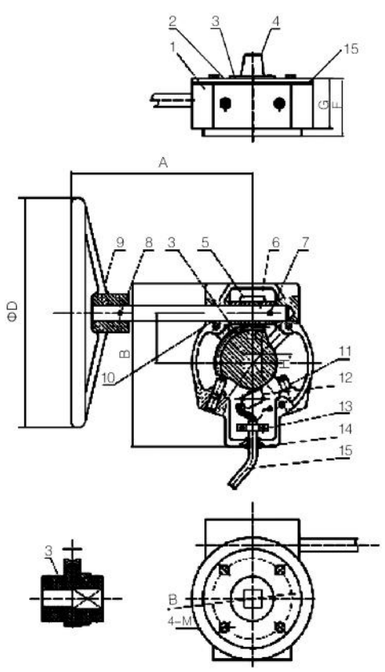


### Gearbox Material List

| No. | Description | Material |
|---|---|---|
| 1 | Gear Body | Ductile Iron |
| 2 | Gear Cover | Ductile Iron |
| 3 | Worm Wheel | Ductile Iron |
| 4 | Indicator | Ductile Iron |
| 5 | Worm | Steel |
| 6 | Handwheel Shaft | Steel |
| 7 | Pin | 416 Stainless Steel |
| 8 | Pin | 416 Stainless Stee |
| 9 | Handwheel | Ductile Iron |
| 10 | O-Ring | EPDM |
| 11 | Set Screw | Steel |
| 12 | Signal Switch | Switch Assembly |
| 13 | Clip | Nylon |
| 14 | Sealing Ring | EPDM |
| 15 | Wire | Wire |
| 16 | Gasket | EPDM |

### Dimensions

| Gearbox | Valve | A | | B | C | D | E | F | G | H | M |
|---|---|---|---|---|---|---|---|---|---|---|---|
| 24:1 | 2"-2 1/2" | 153 | 218 | 164 | 45 | 152 | 70 | 65 | 58 | 10 | M8 |
| 24:1 | 3" | 153 | 218 | 164 | 45 | 152 | 70 | 65 | 58 | 11 | M8 |
| 24:1 | 4"-5" | 153 | 218 | 164 | 45 | 152 | 70 | 65 | 58 | 14 | M8 |
| 24:1 | 6" | 153 | 218 | 164 | 45 | 200 | 70 | 65 | 58 | 16 | M8 |
| 30:1 | 8" | 210 | 232 | 205 | 63 | 300 | 102 | 79 | 67 | 19 | M10 |
| 30:1 | 10" | 210 | 232 | 205 | 63 | 300 | 102 | 79 | 67 | 22 | M10 |
| 80:1 | 12" | 249 | | 284 | 120 | 350 | 125 | 118 | 110 | 24 | M12 |





## Butterfly Valve c/w Signal Gearbox-Grooved End

### Technical Features

- Conforms: ANSI/AWWA C606 or Metric Standard Clear Waterway design
- Connection: Grooved End
- Sizes: 2", 2 1/2", 3", 4", 5", 6", 8", 10", 12"
- Approvals: UL, CUL, FM, NSF/ANSI 61 & NSF/ANSI372
- Maximum Working Pressure: 300 PSI (Maximum Testing Pressure: 600 PSI) conforms to UI1091 & ULC/ORD-C1091 & FM 1112
- Maximum Working Temperature: 80℃ /176°F
- Application: Indoor & Outdoor Use, Fire inflow water, drain pipe, high-rising building fire fighting system, industrial factory building fire protection system
- Coating Details: Epoxy coated interior and exterior by Electrostatic Spray or coating upon request
- Disc: Ductile Iron EPDM Rubber Encapsulated
- Top Flange Standard: ISO 5211
- Certified lead-free by NSF/ANSI 61 & NSF/ANSI 372 is available

### Valve Material List

| No. | Description | Material |
|---|---|---|
| 1 | Upper Shaft Sealing Nut | WCB |
| 2 | Shaft Seal | EPDM |
| 3 | Body | Ductile Iron |
| 4 | Upper Shaft | 416 Stainless Steel |
| 5 | Disc+Rubber Seat | Ductile Iron+EPDM |
| 6 | Lower Shaft | 416 Stainless Steel |
| 7 | Lower Shaft Sealing Nut | WCB |
| 8 | Stem Bushing | PTFE/C95400 |
| 9 | O-Ring | EPDM |
| 10 | Gearbox | |

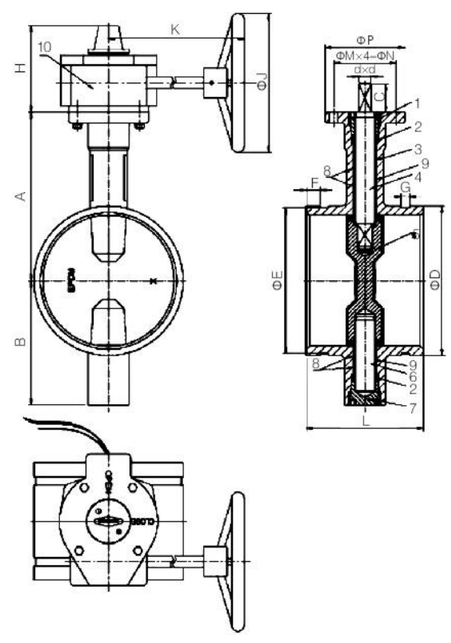


### Dimensions

| Size | A | B | C | D | E | F | G | H | K | | J | P | M | N | d | L |
|---|---|---|---|---|---|---|---|---|---|---|---|---|---|---|---|---|
| 2" | 110 | 85 | 32 | 60.3 | 57.15 | 15.9 | 7.9 | 111 | 153 | 218 | 152 | 90 | 70 | 9 | 10 | 81<br>88 |
| 2 1/2" | 125 | 95 | 32 | 73<br>76.1 | 69.1<br>72.3 | 15.9 | 7.9 | 111 | 153 | 218 | 152 | 90 | 70 | 9 | 10 | 96.4 |
| 3" | 140 | 100 | 32 | 88.9 | 84.9 | 15.9 | 7.9 | 111 | 153 | 218 | 152 | 90 | 70 | 9 | 11 | 97 |
| 4" | 160 | 100 | 32 | 114.3 | 110.1 | 15.9 | 9.5 | 111 | 153 | 218 | 152 | 90 | 70 | 9 | 14 | 115.1 |
| 5" | 170 | 125 | 32 | 139.7<br>141.3 | 135.5<br>137 | 15.9 | 9.5 | 111 | 153 | 218 | 152 | 90 | 70 | 9 | 14 | 132.4<br>148 |
| 6" | 190 | 140 | 32 | 165.1<br>168.3 | 160.9<br>164 | 15.9 | 9.5 | 111 | 153 | 218 | 200 | 90 | 70 | 9 | 16 | 132.4<br>148 |
| 8" | 230 | 175 | 32 | 219.1<br>216.3 | 214.4<br>211.6 | 19 | 11.1 | 126 | 210 | 232 | 300 | 125 | 102 | 12 | 19 | 133<br>147.4 |
| 10" | 260 | 200 | 45 | 267.4<br>273 | 262.6<br>268.3 | 19 | 12.7 | 126 | 210 | 232 | 300 | 125 | 102 | 12 | 24 | 159 |
| 12" | 300 | 240 | 45 | 318.5<br>323.8 | 312.9<br>318.3 | 19 | 12.7 | 161 | 249 | | 350 | 150 | 125 | 14 | 26 | 165 |

### 3D Pictures

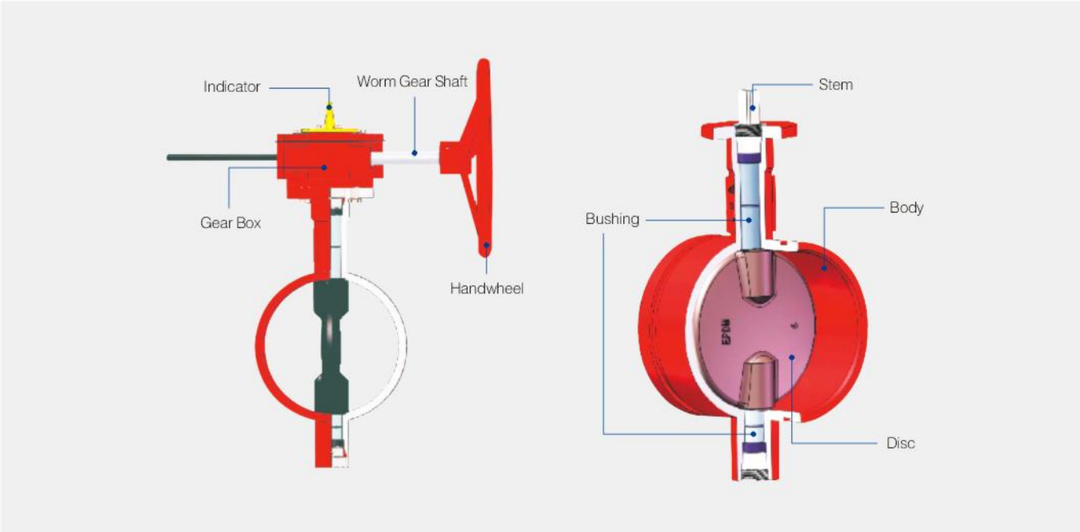


### Gearbox Drawing

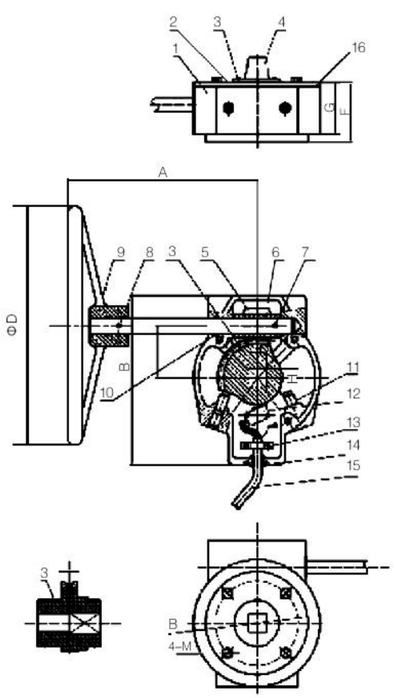


### Gearbox Material List

| No. | Description | Material |
|---|---|---|
| 1 | Gear Body | Ductile Iron |
| 2 | Gear Cover | Ductile Iron |
| 3 | Worm Wheel | Ductile Iron |
| 4 | Indicator | Ductile Iron |
| 5 | Worm | Steel |
| 6 | Handwheel Shaft | Steel |
| 7 | Pin | 416 Stainless Steel |
| 8 | Pin | 416 Stainless Stee |
| 9 | Handwheel | Ductile Iron |
| 10 | O–Ring | EPDM |
| 11 | Set Screw | Steel |
| 12 | Signal Switch | Switch Assembly |
| 13 | Clip | Nylon |
| 14 | Sealing Ring | EPDM |
| 15 | Wire | Wire |
| 16 | Gasket | EPDM |

### Dimensions

| Gearbox | Valve | A | | B | C | D | E | F | G | H | M |
|---|---|---|---|---|---|---|---|---|---|---|---|
| 24:1 | 2"–2½" | 153 | 218 | 164 | 45 | 152 | 70 | 65 | 58 | 10 | M8 |
| 24:1 | 3" | 153 | 218 | 164 | 45 | 152 | 70 | 65 | 58 | 11 | M8 |
| 24:1 | 4"–5" | 153 | 218 | 164 | 45 | 152 | 70 | 65 | 58 | 14 | M8 |
| 24:1 | 6" | 153 | 218 | 164 | 45 | 200 | 70 | 65 | 58 | 16 | M8 |
| 30:1 | 8" | 210 | 232 | 205 | 63 | 300 | 102 | 79 | 67 | 19 | M10 |
| 30:1 | 10" | 210 | 232 | 205 | 63 | 300 | 102 | 79 | 67 | 22 | M10 |
| 80:1 | 12" | 249 | | 284 | 120 | 350 | 125 | 118 | 110 | 24 | M12 |





## Butterfly Valve with Gearbox/Lever - Wafer End

### Technical Features

- Flange Standard: ANSI 125 / 150, DIN 2501 PN10 / 16
- Connection: Wafer End
- Sizes: 2", 21/2", 3", 4", 5", 6", 8", 10", 12"
- Maximum Working Pressure: 300 PSI(Maximum Testing Pressure: 600 PSI) conforms to UL1091 & ULC / ORD–C1091 & FM 1112
- Maximum Working Temperature: 80℃ /176°F
- Application: Indoor & Outdoor Use, Fire inflow water, drain pipe, high–rising building fire fighting system, industrial factory building fire protection system
- Coating Details: Epoxy coated interior and exterior by Electrostatic Spray or coating upon request
- Disc: Ductile Iron EPDM Rubber Encapsulated
- Top Flange Standard: ISO 5211
- Certified lead–free by NSF/ANSI 61 & NSF / ANSI 372 is available

### Valve Material List

| No. | Description | Material |
|---|---|---|
| 1 | Upper Shaft Sealing Nut | WCB |
| 2 | Shaft Seal | EPDM |
| 3 | Body | Ductile Iron |
| 4 | Upper Shaft | 416 Stainless Steel |
| 5 | Disc+Rubber Seat | Ductile Iron+EPDM |
| 6 | Lower Shaft | 416 Stainless Steel |
| 7 | Lower Shaft Sealing Nut | WCB |
| 8 | End Face Seal | EPDM |
| 9 | Stem Bushing | PTFE/C95400 |
| 10 | O–Ring | EPDM |
| 11 | Lever | |
| 12 | Gearbox | |

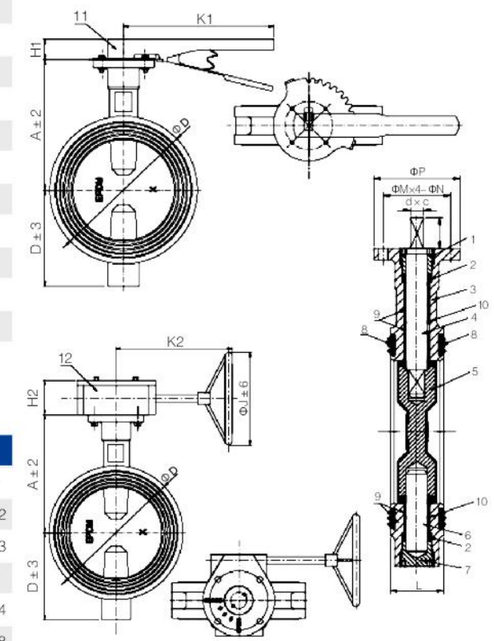


### Dimensions

| Size | A | B | C | D | H1 | H2 | K1 | K2 | J | P | M | N | d | L |
|---|---|---|---|---|---|---|---|---|---|---|---|---|---|---|
| 2" | 110 | 85 | 32 | 100 | 32 | 65 | 267 | 151 | 152 | 90 | 70 | 9 | 10 | 42 |
| 21/2" | 125 | 95 | 32 | 112 | 32 | 65 | 267 | 151 | 152 | 90 | 70 | 9 | 10 | 44.2 |
| 3" | 140 | 100 | 32 | 120 | 32 | 65 | 267 | 151 | 152 | 90 | 70 | 9 | 11 | 45.3 |
| 4" | 160 | 100 | 32 | 161 | 32 | 65 | 267 | 151 | 152 | 90 | 70 | 9 | 14 | 52 |
| 5" | 170 | 125 | 32 | 182 | 32 | 65 | 267 | 151 | 152 | 90 | 70 | 9 | 14 | 54.4 |
| 6" | 190 | 140 | 32 | 216 | 32 | 65 | 267 | 146 | 200 | 90 | 70 | 9 | 16 | 55.8 |
| 8" | 230 | 175 | 32 | 260 | 37 | 77 | 267 | 233 | 290 | 125 | 102 | 12 | 19 | 60.5 |
| 10" | 260 | 200 | 45 | 320 | / | 77 | / | 233 | 290 | 125 | 102 | 12 | 22 | 66.5 |
| 12" | 300 | 240 | 45 | 375 | / | 77 | / | 226 | 290 | 150 | 125 | 14 | 26 | 76.9 |

## GD-381G Butterfly Valve

Butterfly Valve with Gearbox -Grooved End

### Technical Features

- Conforms:ANSI/AWWA C606 or Metric Standard Clear Waterway design
- Connection: Grooved End
- Sizes: 2", 2½", 3", 4", 5", 6", 8", 10", 12"
- Maximum Working Pressure: 300 PSI(Maximum Testing Pressure: 600 PSI) conforms to UL1091 & ULC/ORD–C1091 & FM 1112
- Maximum Working Temperature: 80℃ / 176°F
- Application: Indoor & Outdoor Use, Fire inflow water, drain pipe, high–rising building fire fighting system, industrial factory building fire protection system
- Coating Details: Epoxy coated interior and exterior by Electrostatic Spray or coating upon request
- Disc: Ductile Iron EPDM Rubber Encapsulated
- Top Flange Standard: ISO 5211
- Certified lead–free by NSF/ANSI 61 & NSF / ANSI 372 is available

### Valve Material List

| No. | Description | Material |
|---|---|---|
| 1 | Upper Shaft Sealing Nut | WCB |
| 2 | Shaft Seal | EPDM |
| 3 | Body | Ductile Iron |
| 4 | Upper Shaft | 416 Stainless Steel |
| 5 | Disc+Rubber Seat | Ductile Iron+EPDM |
| 6 | Lower Shaft | 416 Stainless Steel |
| 7 | Lower Shaft Sealing Nut | WCB |
| 8 | Stem Bushing | PTFE/C95400 |
| 9 | O–Ring | EPDM |
| 10 | Gearbox | |

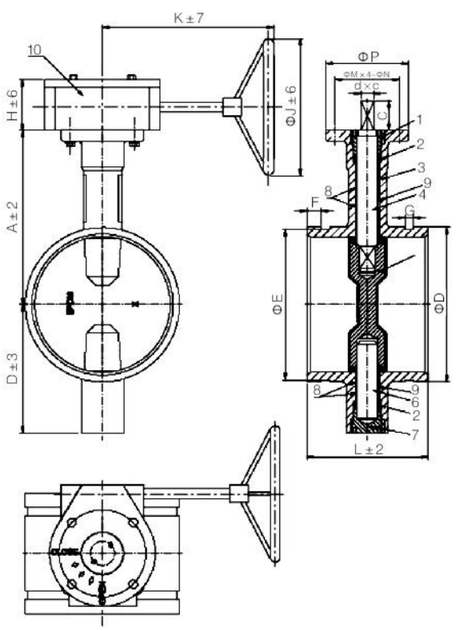


### Dimensions

| Size | A | B | C | D | E | F | G | H | K | J | P | M | N | d | L |
|---|---|---|---|---|---|---|---|---|---|---|---|---|---|---|---|
| 2" | 110 | 85 | 32 | 60.3 | 57.15 | 15.9 | 7.9 | 65 | 151 | 152 | 90 | 70 | 9 | 10 | 81<br>88 |
| 2½" | 125 | 95 | 32 | 73<br>76.1 | 69.1<br>72.3 | 15.9 | 7.9 | 65 | 151 | 152 | 90 | 70 | 9 | 10 | 96.4 |
| 3" | 140 | 100 | 32 | 88.9 | 84.9 | 15.9 | 7.9 | 65 | 151 | 152 | 90 | 70 | 9 | 11 | 97 |
| 4" | 160 | 100 | 32 | 114.3 | 110.1 | 15.9 | 9.5 | 65 | 151 | 152 | 90 | 70 | 9 | 14 | 115.1 |
| 5" | 170 | 125 | 32 | 139.7<br>141.3 | 135.5<br>137 | 15.9 | 9.5 | 65 | 151 | 152 | 90 | 70 | 9 | 14 | 132.4<br>148 |
| 6" | 190 | 140 | 32 | 165.1<br>168.3 | 160.9<br>164 | 15.9 | 9.5 | 65 | 146 | 200 | 90 | 70 | 9 | 16 | 132.4<br>148 |
| 8" | 230 | 175 | 32 | 219.1<br>216.3 | 214.4<br>211.6 | 19 | 11.1 | 77 | 233 | 290 | 125 | 102 | 12 | 19 | 133<br>147.4 |
| 10" | 260 | 200 | 45 | 267.4<br>273 | 262.6<br>268.3 | 19 | 12.7 | 77 | 233 | 290 | 125 | 102 | 12 | 22 | 159 |
| 12" | 300 | 240 | 45 | 318.5<br>323.8 | 312.9<br>318.3 | 19 | 12.7 | 77 | 226 | 290 | 150 | 125 | 14 | 26 | 165 |



## WD-371G/WD-371L Butterfly Valve

## Fire Fighting Valve

### Technical Features

- Conforms: ANSI / AWWA C606 or Metric Standard Clear Waterway design
- Connection: Grooved End
- Sizes: 2",21/2", 3", 4", 5", 6", 8"
- Maximum Working Pressure: 300 PSI (Maximum Testing Pressure: 600 PSI) conforms to UL1091 & ULC / ORD–C1091 & FM 1112
- Maximum Working Temperature: 80℃ / 176°F
- Application: Indoor & Outdoor Use, Fire inflow water, drain pipe high–rising building fire fighting system, industrial factory building fire protection system
- Coating Details: Epoxy coated interior and exterior by Electrostatic Spray or coating upon request
- Disc: Ductile Iron EPDM Rubber Encapsulated
- Top Flange Standard: ISO 5211
- Certified lead–free by NSF/ANSI 61 & NSF/ANSI 372 is available

### Valve Material List

| No. | Description | Material |
|---|---|---|
| 1 | Upper Shaft Sealing Nut | WCB |
| 2 | Shaft Seal | EPDM |
| 3 | Body | Ductile Iron |
| 4 | Upper Shaft | 416 Stainless Steel |
| 5 | Disc+Rubber Seat | Ductile Iron+EPDM |
| 6 | Lower Shaft | 416 Stainless Steel |
| 7 | Lower Shaft Sealing Nut | WCB |
| 8 | Stem Bushing | PTFE/C95400 |
| 9 | O–Ring | EPDM |
| 10 | Lever | Malleable Iron |

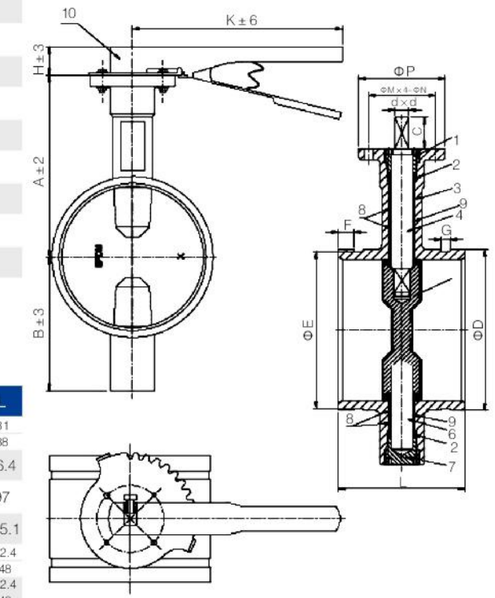


### Dimensions

| Size | A | B | C | D | E | F | G | H | K | P | M | N | d | L |
|---|---|---|---|---|---|---|---|---|---|---|---|---|---|---|
| 2" | 110 | 85 | 32 | 60.3 | 57.2 | 15.9 | 7.9 | 32 | 267 | 90 | 70 | 9 | 10 | 81<br>88 |
| 2½" | 125 | 95 | 32 | 73<br>76.1 | 69.1<br>72.3 | 15.9 | 7.9 | 32 | 267 | 90 | 70 | 9 | 10 | 96.4 |
| 3" | 140 | 100 | 32 | 88.9 | 84.9 | 15.9 | 7.9 | 32 | 267 | 90 | 70 | 9 | 11 | 97 |
| 4" | 160 | 100 | 32 | 114.3 | 110.1 | 15.9 | 9.5 | 32 | 267 | 90 | 70 | 9 | 14 | 115.1 |
| 5" | 170 | 125 | 32 | 139.7<br>141.3 | 135.5<br>137 | 15.9 | 9.5 | 32 | 267 | 90 | 70 | 9 | 14 | 132.4<br>148 |
| 6" | 190 | 140 | 32 | 165.1<br>168.3 | 160.9<br>164 | 15.9 | 9.5 | 32 | 267 | 90 | 70 | 9 | 16 | 132.4<br>148 |
| 8" | 230 | 175 | 37 | 216.3<br>219.1 | 211.6<br>214.4 | 19 | 11.1 | 37 | 353 | 125 | 102 | 12 | 19 | 147.4<br>133 |

NINGJIN APC INDUSTRIES CO.,LTD. offers a complete package of resilient wedgegate valve with excellent Ductile Iron structure and stable sealing capability and popular end connection options

### APC Resilient Wedge Gate Valve Features

- Conforms: ANSI/AWWA C515
- Approvals: UL, CUL, FM, NSF/ANSI 61 & NSF/ANSI 372 Certified lead-free
- Maximum Working Temperature: 80℃ / 176°F
- Coating: Epoxy coated interior and exterior by Electrostatic Spray or Coating upon request

### Application

- Outdoor and Indoor Fire inflow water, water supply and drainage, potable water, high-rising building fire fighting system, industrial factory building fire protection system.
- All OS & Y gate valves have tamper resistant handwheel nuts as well as pre-grooved stems enabling seamless tamper switch installation.
- All NRS gate valves are available with operated nut installed with vertical indicator post and wall type indicator.

### Advantages

- Valve body, bonnet, disc, gland, & operating nut are all produced with ductile iron material with superior strength-to-weight ratios to guarantee high quality.
- Long service life with resilient seat cycling test at least 5000 times.
- The bottom of gate valve adopt straight-through design, no foreign matter store to make sure smooth flow and reliable sealing.
- Self-sealing design between the bonnet and body make the sealing more tight when pressure is higher within the allowable range.
- Multiple O-ring sealing structure to protect the stem under pressure during operation and maintenance, it causes no damage to the operator.

### A full range UL/FM Gate Valves to meet customers' different requirements

- UL/FM OS&Y Gate valve (200psi & 300psi)
- Flange × Flange
- Flange × Groove
- Groove × Groove

- UL/FM NRS Gate valve(200psi & 300psi)
- Flange × Flange
- Flange × Groove
- Groove × Groove
- MJ × MJ
- MJ × Flange

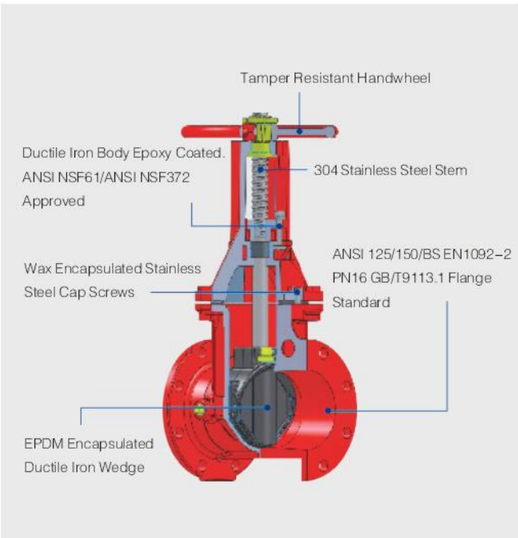


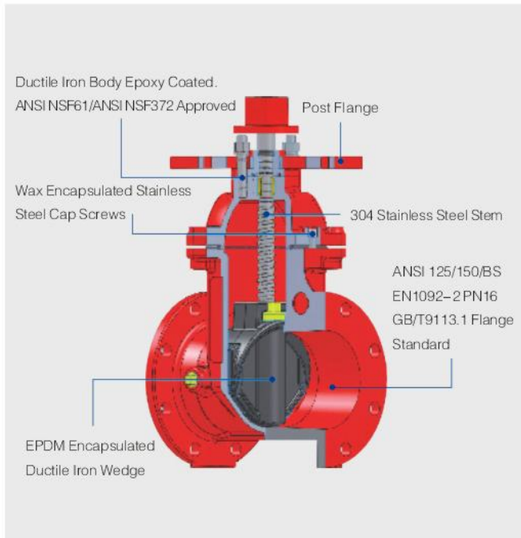






## UL/FM OS&Y Gate Valves

**Z41**
Flange
ANSI, BS, DIN, GB
2"/DN50-16"/DN400
14Bar/200psi
UL/FM/NSF61/NSF372

**Z481**
Flange × Groove
ANSI, BS, DIN, GB
2"/DN50-16"/DN300
14Bar/200psi
UL/FM/NSF61/NSF372

**Z81**
Groove
ANSI, BS, DIN, GB
2"/DN50-12"/DN300
14Bar/200psi
UL/FM/NSF61/NSF372

**Z41-300**
Flange
ANSI, BS, DIN, GB
2 1/2"/DN65-12"/DN300
31Bar/300psi
UL/FM/NSF61/NSF372

**Z41-300A**
Flange
ANSI, BS, DIN, GB
2 1/2"/DN65-12"/DN300
21Bar/300psi
UL/FM/NSF61/NSF372

**Z81-300**
Groove
ANSI, BS, DIN, GB
2 1/2"/DN65-12"/DN300
21Bar/300psi
UL/FM/NSF61/NSF372

**Z81-300A**
Groove
ANSI, BS, DIN, GB
2 1/2"/DN65-12"/DN300
21Bar/300psi
UL/FM/NSF61/NSF372

**Z481-300**
Flange × Groove
ANSI, BS, DIN, GB
2 1/2"/DN65-12"/DN300
21Bar/300psi
UL/FM/NSF61/NSF372

**Z481-300A**
Flange × Groove
ANSI, BS, DIN, GB
2 1/2"/DN65-12"/DN300
21Bar/300psi
UL/FM/NSF61/NSF372

## UL/FM Non Rising Stem Gate Valves

**Z45**
Flange
ANSI, BS, DIN, GB
2"/DN50-12"/DN300
14Bar/200psi
UL/FM/NSF61/NSF372

**Z485**
Flange × Groove
ANSI, BS, DIN, GB
2"/DN50-12"/DN300
14Bar/200psi
UL/FM/NSF61/NSF372

**Z85**
Groove
ANSI, BS, DIN, GB
2"/DN50-12"/DN300
14Bar/200psi
UL/FM/NSF61/NSF372

**Z45-300**
Flange
ANSI, DIN, GB
2 1/2"/DN65-12"/DN300
31Bar/300psi
UL/FM/NSF61/NSF372

**Z45-300A**
Flange
ANSI, DIN, GB
2"/DN50-12"/DN300
21Bar/300psi
UL/FM/NSF61/NSF372

**Z85-300**
Groove
ANSI, DIN, GB
2 1/2"/DN65-12"/DN300
21Bar/300psi
UL/FM/NSF61/NSF372

**Z85-300A**
Groove
ANSI, DIN, GB
2 1/2"/DN65-12"/DN300
21Bar/300psi
UL/FM/NSF61/NSF372

**Z485-300**
Flange × Groove
ANSI, DIN, GB
2 1/2"/DN65-12"/DN300
21Bar/300psi
UL/FM/NSF61/NSF372

**Z485-300A**
Flange × Groove
ANSI, DIN, GB
2 1/2"/DN65-12"/DN300
21Bar/300psi
UL/FM/NSF61/NSF372

**Z45-300FJA**
Flange × MJ
ANSI, DIN, GB
2"/DN50-12"/DN300
21Bar/300psi
UL/FM/NSF61/NSF372

**Z45-300MJA**
MJ × MJ
ANSI, DIN, GB
2"/DN50-12"/DN300
21Bar/300psi
UL/FM/NSF61/NSF372

# Z41-300 Gate Valve

## Resilient Wedge OS & Y Gate Valve - Flanged End

### Technical Features

- Nominal Pressure: 300PSI
- Flange Standard: ASME / ANSI B16.1 Cass 125 or ASME/ANSI B16.42 Class 150 or BS EN 1092-2 PN16 or GB/T9113.1
- Sizes: 2½", 3", 4", 5", 6", 8", 10", 12"
- Face to Face Standard: ASME B16.10
- Approvals: UL, CUL, FM, NSF/ANSI 61 & NSF / ANSI 372, CCC
- Maximum Working Pressure: 300PSI(Maximum Testing Pressure: 600PSI) conforms to UL 262, ULC/ORD C 262-92, FM 1120 / 1130
- Maximum Working Temperature: 80℃ / 176°F
- Coating Details: Epoxy coated interior and exterior by Electrostatic Spray or Coating upon request
- NPT plug on body with 2 operating nuts
- Certified lead-free by NSF/ANSI 61 & NSF / ANSI 372 is available

### Valve Material List

| No. | Description | Material |
|---|---|---|
| 1 | Gasket | C95400 |
| 2 | Bonnet | Ductile Iron |
| 3 | Packing | Graphite |
| 4 | Disc | Ductile Iron +EPDM |
| 5 | Body | Ductile Iron |
| 6 | Sealing Ring | EPDM |
| 7 | Bolt | Steel 1045 |
| 8 | Gland | Ductile Iron |
| 9 | Nut | Steel 1045 |
| 10 | Flat Washer | Steel 1045 |
| 11 | Bolt | Steel 1045 |
| 12 | Handwheel | Ductile Iron |
| 13 | Lock Nut | C95400 |
| 14 | Locating Screw | Stainless Steel 304 |
| 15 | Stem | Stainless Steel 304 |
| 16 | Stem Nut | C95400 |
| 17 | Plug | C95400 |
| 18 | Lifting Nut | CF8 |
| 19 | Pin | Stainless Steel 304 |
| 20 | Sealing Ring | EPDM |

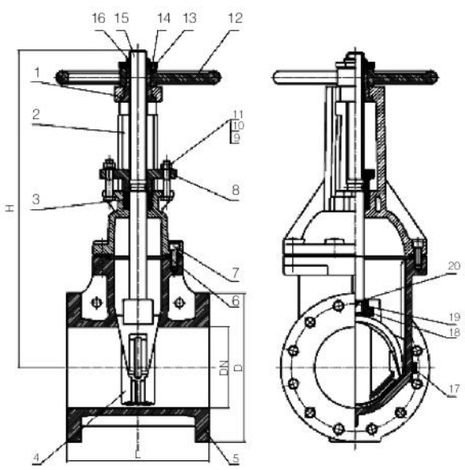


### Dimensions

| Size | DN | L | D | H |
|---|---|---|---|---|
| 2½" | 65 | 190 | 178 | 370 |
| 3" | 80 | 203 | 191 | 420 |
| 4" | 100 | 229 | 229 | 447 |
| 5" | 125 | 254 | 254 | 547 |
| 6" | 150 | 267 | 279 | 607 |
| 8" | 200 | 292 | 343 | 754 |
| 10" | 250 | 330 | 406 | 890 |
| 12" | 300 | 356 | 483 | 1031 |



# Z81-300 Gate Valve

## Resilient Wedge OS & Y Gate Valve - Grooved End

### Technical Features

- Nominal Pressure: 300PSI
- Groove standard: Metric or ANSI/AWWA C606
- Face to Face Standard: ASME B16.10
- Sizes: 2½", 3", 4", 5", 6", 8", 10", 12"
- Approvals: UL, CUL, FM, NSF/ANSI 61 & NSF/ANSI 372
- Maximum Working Pressure: 300PSI(Maximum Testing Pressure: 600PSI) conforms to UL 262, ULC /ORD C 262-92, FM 1120 / 1130
- Maximum Working Temperature: 80℃ / 176°F
- Coating Details: Epoxy coated interior and exterior by Electrostatic Spray or Coating upon request
- NPT plug on body with 2 operating nuts
- Certified lead-free by NSF/ANSI 61 & NSF/ANSI 372 is available

### Valve Material List

| No. | Description | Material |
|---|---|---|
| 1 | Gasket | Stainless Steel 304 or C95400 |
| 2 | Bonnet | Ductile Iron |
| 3 | Packing | Graphite |
| 4 | Disc | Ductile Iron +EPDM |
| 5 | Body | Ductile Iron |
| 6 | Sealing Ring | EPDM |
| 7 | Bolt | Stainless Steel 304 or Steel 1045 |
| 8 | Gland | Ductile Iron |
| 9 | Nut | Stainless Steel 304 or Steel 1045 |
| 10 | Flat Washer | Stainless Steel 304 or Steel 1045 |
| 11 | Bolt | Stainless Steel 304 or Steel 1045 |
| 12 | Handwheel | Ductile Iron |
| 13 | Lock Nut | C95400 |
| 14 | Locating Screw | Stainless Steel 304 or Steel 1045 |
| 15 | Stem | Stainless Steel 304 or C95400 |
| 16 | Stem Nut | C95400 |
| 17 | Plug | C95400 |
| 18 | Lifting Nut | CF8/CF8M or C95400 |
| 19 | Pin | Stainless Steel 304 |
| 20 | Sealing Ring | EPDM |

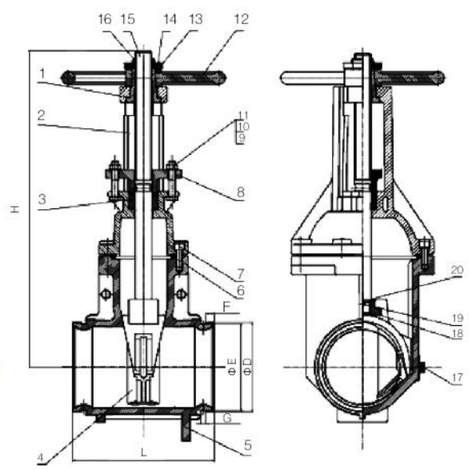


### Dimensions

| Size | DN | L | F | D | E | G | H |
|---|---|---|---|---|---|---|---|
| 2½" | 65 | 190 | 15.9 | 73<br>76.1 | 69.1<br>72.3 | 7.9 | 370 |
| 3" | 80 | 203 | 15.9 | 88.9 | 84.9 | 7.9 | 420 |
| 4" | 100 | 229 | 15.9 | 114.3 | 110.1 | 9.5 | 447 |
| 5" | 125 | 254 | 15.9 | 139.7<br>141.3 | 135.5<br>137 | 9.5 | 547 |
| 6" | 150 | 267 | 15.9 | 165.1<br>168.3 | 160.8<br>163.9 | 9.5 | 607 |
| 8" | 200 | 292 | 19 | 216.3<br>219.1 | 211.6<br>214.3 | 11.1 | 754 |
| 10" | 250 | 330 | 19 | 273 | 268.3 | 12.7 | 890 |
| 12" | 300 | 356 | 19 | 323.9 | 318.3 | 12.7 | 1031 |

# Z45-300 Gate Valve

## Resilient Wedge NRS Gate Valve - Flanged End

### Technical Features

- Nominal Pressure: 300PSI
- Flange Standard: ASME/ANSI B16.1 Class 125 or ASME / ANSI B16.42 Class 150 or BS EN1092-2 PN16 or GB/T9113.1
- Sizes: 2½", 3", 4", 5", 6", 8", 10", 12"
- Face to Face Standard: ASME B16.10
- Approvals: UL, CUL, FM, NSF / ANSI 61 & NSF / ANSI 372, CCC
- Maximum Working Pressure: 300PSI(Maximum Testing Pressure: 600PSI) conforms to UL262, ULC /ORD C262-92, FM 1120 / 1130
- Maximum Working Temperature: 80℃ / 176°F
- Coating Details: Epoxy coated interior and exterior by Electrostatic Spray or Coating upon request
- NPT plug on body with 2 operating nuts
- Certified lead-free by NSF / ANSI 61 & NSF / ANSI 372 is available

### Valve Material List

| No. | Description | Material |
|---|---|---|
| 1 | Flat Washer | Steel 1045 or Stainless Steel 304 |
| 2 | Inner Hexagon Screw | Steel 1045 or Stainless Steel 304 |
| 3 | Sealing Gland | EPDM |
| 4 | O-Ring | EPDM |
| 5 | Sealing Ring | EPDM |
| 6 | O-Ring | EPDM |
| 7 | Bonnet | Ductile Iron |
| 8 | Stem | Stainless Steel 304 |
| 9 | Disc | Ductile Iron +EPDM |
| 10 | Body | Ductile Iron |
| 11 | Sealing Ring | EPDM |
| 12 | Retaining Ring | C95400 |
| 13 | Gland | Ductile Iron |
| 14 | Terminal Pad | Ductile Iron |
| 15 | Link Block | Ductile Iron |
| 16 | Nut | Stainless Steel 304 or Steel 1045 |
| 17 | Studs | Stainless Steel 304 or Steel 1045 |
| 18 | Washer | Steel 1045 |
| 19 | Inner Hexagon Screw | Steel 1045 |
| 20 | Master Screw | C95400 |
| 21 | Plug | C95400 |

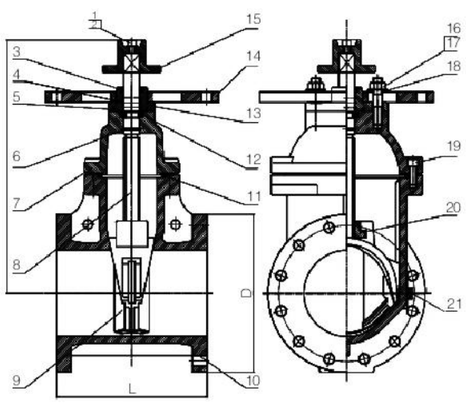


### Dimensions

| Size | DN | L | D | H |
|---|---|---|---|---|
| 2½" | 65 | 190 | 178 | 292 |
| 3" | 80 | 203 | 191 | 322 |
| 4" | 100 | 229 | 229 | 342 |
| 5" | 125 | 254 | 254 | 412 |
| 6" | 150 | 267 | 279 | 448 |
| 8" | 200 | 292 | 343 | 534 |
| 10" | 250 | 330 | 406 | 635 |
| 12" | 300 | 356 | 483 | 720 |



# Z85-300 Gate Valve



## Resilient Wedge NRS Gate Valve - Grooved End

### Technical Features

- Nominal Pressure: 300PSI
- Groove standard: Metric or ANSI/AWWA C606
- Face to Face Standard: ASME B16.10
- Sizes: 2½", 3", 4", 5", 6", 8", 10", 12"
- Approvals: UL, CUL, FM, NSF / ANSI 61 & NSF / ANSI 372
- Maximum Working Pressure: 300PSI (Maximum Testing Pressure: 600PSI) conforms to UL262, ULC/ORD C262-92, FM 1120/1130
- Maximum Working Temperature: 80℃ / 176°F
- Coating Details: Epoxy coated interior and exterior by Electrostatic Spray or Coating upon request
- NPT plug on body with 2 operating nuts
- Certified lead-free by NSF / ANSI 61 & NSF / ANSI 372 is available

### Valve Material List

| No. | Description | Material |
|---|---|---|
| 1 | Flat Washer | Steel 1045 or Stainless Steel 304 |
| 2 | Hexagon Socket Screw | Steel 1045 or Stainless Steel 304 |
| 3 | Sealing Ring | EPDM |
| 4 | O-Ring | EPDM |
| 5 | Sealing Ring | EPDM |
| 6 | O-Ring | EPDM |
| 7 | Bonnet | Ductile Iron |
| 8 | Stem | Stainless Steel 304 or C95400 |
| 9 | Plug | Stainless Steel 304 or C95400 |
| 10 | Disc | Ductile Iron +EPDM |
| 11 | Body | Ductile Iron |
| 12 | Sealing Ring | EPDM |
| 13 | Retaining Ring | C95400 |
| 14 | Gland | Ductile Iron |
| 15 | Post Flange | Ductile Iron |
| 16 | Wrench Nut | Ductile Iron |
| 17 | Bolt | Stainless Steel 304 or Steel 1045 |
| 18 | Washer | Stainless Steel 304 or Steel 1045 |
| 19 | Hexagon Socket Screw | Steel 1045 or Stainless Steel 304 |
| 20 | Stem Nut | CF8 or C95400 |

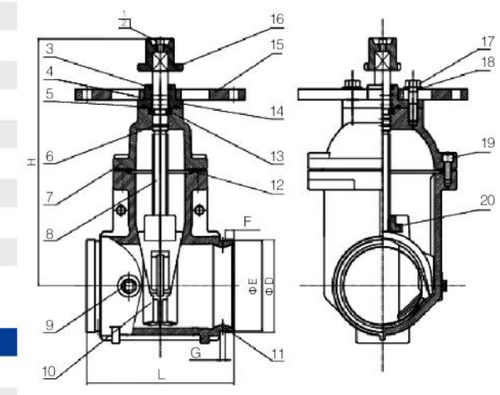


### Dimensions

| Size | DN | L | F | D | E | G | H |
|---|---|---|---|---|---|---|---|
| 2½" | 65 | 190 | 15.9 | 73<br>76.1 | 69.1<br>72.3 | 7.9 | 292 |
| 3" | 80 | 203 | 15.9 | 88.9 | 84.9 | 7.9 | 322 |
| 4" | 100 | 229 | 15.9 | 114.3 | 110.1 | 9.5 | 342 |
| 5" | 125 | 254 | 15.9 | 139.7<br>141.3 | 135.5<br>137 | 9.5 | 412 |
| 6" | 150 | 267 | 15.9 | 165.1<br>168.3 | 160.8<br>163.9 | 9.5 | 448 |
| 8" | 200 | 292 | 19 | 216.3<br>219.1 | 211.6<br>214.3 | 11.1 | 534 |
| 10" | 250 | 330 | 19 | 273 | 268.3 | 12.7 | 635 |
| 12" | 300 | 356 | 19 | 323.9 | 318.3 | 12.7 | 720 |

# Z41-300A Gate Valve

## Resilient Wedge OS & Y Gate Valve - Flanged End

### Technical Features

- Nominal Pressure: 300PSI
- Conforms: ANSI/AWWA C515 Standard
- Face to Face Standard: ASME B16.10
- Sizes: 2½", 3", 4", 5", 6", 8", 10", 12"
- Flange Standard: ASME/ANSI B16.1 Class 125 or ASME / ANSI B16.42 Class 150 or BS EN1092-2 PN16 or GB/T9113.1
- Approvals: FM, UL, CUL, NSF / ANSI 61 & NSF / ANSI 372
- Maximum Working Pressure: 300PSI (Maximum Testing Pressure: 600PSI) conforms to UL262, ULC/ORD C262-92, FM 1120 / 1130
- Maximum Working Temperature: 80℃ / 176°F
- Coating Details: Epoxy coated interior and exterior by Electrostatic Spray or Coating upon request
- NPT plug on body with 2 operating nuts
- Certified lead-free by NSF/ANSI 61 &NSF/ANSI 372 is available

### Valve Material List

| No. | Description | Material |
|---|---|---|
| 1 | Gasket | Stainless Steel 304 or C95400 |
| 2 | Bonnet | Ductile Iron |
| 3 | Packing | Graphite |
| 4 | Disc | Ductile Iron +EPDM |
| 5 | Body | Ductile Iron |
| 6 | Sealing Ring | EPDM |
| 7 | Bolt | Stainless Steel 304 or Steel 1045 |
| 8 | Gland | Ductile Iron |
| 9 | Nut | Stainless Steel 304 or Steel 1045 |
| 10 | Flat Washer | Stainless Steel 304 or Steel 1045 |
| 11 | Bolt | Stainless Steel 304 or Steel 1045 |
| 12 | Handwheel | Ductile Iron |
| 13 | Lock Nut | C95400 |
| 14 | Locating Screw | Stainless Steel 304 or Steel 1045 |
| 15 | Stem | Stainless Steel 304 or C95400 |
| 16 | Stem Nut | C95400 |
| 17 | Plug | C95400 |
| 18 | Lifting Nut | CF8 or C95400 |
| 19 | Pin | Stainless Steel 304 |
| 20 | Sealing Ring | EPDM |

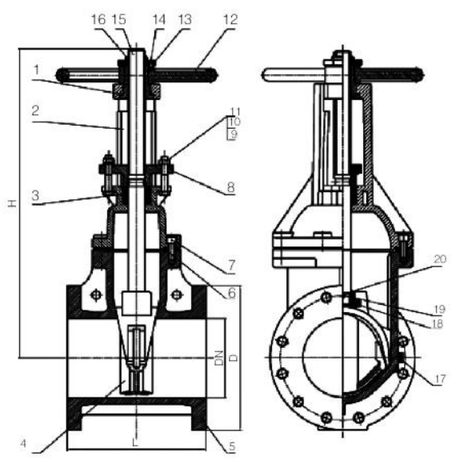


### Dimensions

| Size | DN | L | D | H |
|---|---|---|---|---|
| 2½" | 65 | 190 | 178 | 370 |
| 3" | 80 | 203 | 191 | 420 |
| 4" | 100 | 229 | 229 | 447 |
| 5" | 125 | 254 | 254 | 547 |
| 6" | 150 | 267 | 279 | 607 |
| 8" | 200 | 292 | 343 | 754 |
| 10" | 250 | 330 | 406 | 890 |
| 12" | 300 | 356 | 483 | 1031 |



# Z81-300A Gate Valve

## Resilient Wedge OS & Y Gate Valve - Grooved End

### Technical Features

- Nominal Pressure: 300PSI
- Conforms: ANSI/AWWA C515 Standard
- Groove Standard: ANSI/AWWA C606 or Metric
- Face to Face Standard: ASME B1610
- Sizes: 2½", 3", 4", 5", 6", 8", 10", 12"
- Approvals: FM, UL, CUL, NSF / ANSI 61 & NSF / ANSI 372
- Maximum Working Pressure: 300PSI (Maximum Testing Pressure: 600PSI) conforms to UL262, ULC/ORD C262-92, FM 1120 /1130
- Maximum Working Temperature: 80℃ / 176°F
- Coating Details: Epoxy coated interior and exterior by Electrostatic Spray or Coating upon request
- NPT plug on body with 2 operating nuts
- Certified lead-free by NSF/ANSI 61 & NSF ANSI 372 is available

### Valve Material List

| No. | Description | Material |
|---|---|---|
| 1 | Gasket | Stainless Steel 304 or C95400 |
| 2 | Bonnet | Ductile Iron |
| 3 | Packing | Graphite |
| 4 | Disc | Ductile Iron +EPDM |
| 5 | Body | Ductile Iron |
| 6 | Sealing Ring | EPDM |
| 7 | Bolt | Stainless Steel 304 or Steel 1045 |
| 8 | Gland | Ductile Iron |
| 9 | Nut | Stainless Steel 304 or Steel 1045 |
| 10 | Flat Washer | Stainless Steel 304 or Steel 1045 |
| 11 | Bolt | Stainless Steel 304 or Steel 1045 |
| 12 | Handwheel | Ductile Iron |
| 13 | Lock Nut | C95400 |
| 14 | Locating Screw | Stainless Steel 304 or Steel 1045 |
| 15 | Stem | Stainless Steel 304 or C95400 |
| 16 | Stem Nut | C95400 |
| 17 | Plug | C95400 |
| 18 | Lifting Nut | CF8 or C95400 |
| 19 | Pin | Stainless Steel 304 |
| 20 | Sealing Ring | EPDM |

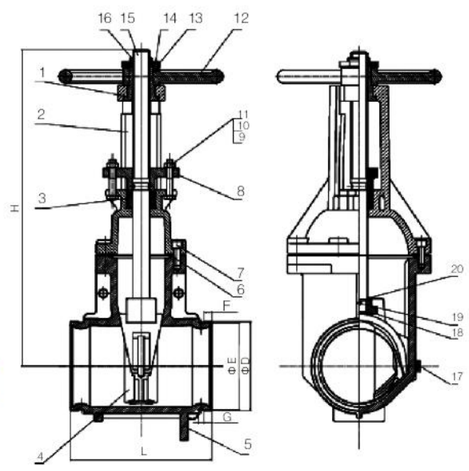


### Dimensions

| Size | DN | L | F | D | E | G | H |
|---|---|---|---|---|---|---|---|
| 2½" | 65 | 190 | 15.9 | 73<br>76.1 | 69.1<br>72.3 | 7.9 | 370 |
| 3" | 80 | 203 | 15.9 | 88.9 | 84.9 | 7.9 | 420 |
| 4" | 100 | 229 | 15.9 | 114.3 | 110.1 | 9.5 | 447 |
| 5" | 125 | 254 | 15.9 | 139.7<br>141.3 | 135.5<br>137 | 9.5 | 547 |
| 6" | 150 | 267 | 15.9 | 165.1<br>168.3 | 160.8<br>163.9 | 9.5 | 607 |
| 8" | 200 | 292 | 19 | 216.3<br>219.1 | 211.6<br>214.3 | 11.1 | 754 |
| 10" | 250 | 330 | 19 | 273 | 268.3 | 12.7 | 890 |
| 12" | 300 | 356 | 19 | 323.9 | 318.3 | 12.7 | 1031 |

# Z45-300FJA Gate Valve

## Resilient Wedge NRS Gate Valve - Flanged×Mechanical Joint End

### Technical Features

- Nominal Pressure: 300PSI
- Conforms: ANSI / AWWA C515 Standard
- Sizes: 2", 3", 4", 6", 8", 10", 12"
- 2" FM only
- Flange Standard: ASME/ANSI B16.1 Class 125 or ASME / ANSI B16.42 Class 150 or BS EN1092-2 PN16 or GB/T9113.1
- Mechanical Standard: ANSI/AWWA 110 or ANSI/AWWA C153
- Approvals: FM, UL, CUL, NSF / ANSI 61 & NSF / ANSI 372
- Maximum Working Pressure: 300PSI (Maximum Testing Pressure: 600PSI) conforms to UL262, ULC/ORD C262-92, FM 1120 / 1130
- Maximum Working Temperature: 80C /176F
- Coating Details: Epoxy coated interior and exterior by Electrostatic Spray or Coating upon request
- NPT plug on body with 1 operating nut
- Certified lead-free by NSF / ANSI 61 & NSF / ANSI 372 is available
- With and Without Post Flange are available

### Valve Material List

| No. | Description | Material |
|---|---|---|
| 1 | Flat Washer | Steel 1045 or Stainless Steel 304 |
| 2 | Hexagon Socket Screw | Steel 1045 or Stainless Steel 304 |
| 3 | Sealing Ring | EPDM |
| 4 | O-ring | EPDM |
| 5 | Sealing Ring | EPDM |
| 6 | O-ring | EPDM |
| 7 | Bonnet | Ductile Iron |
| 8 | Stem | Steel 1045 or Stainless Steel 304 |
| 9 | Plug | Steel 1045 or Stainless Steel 304 |
| 10 | Disc | Ductile Iron+EPDM |
| 11 | Body | Ductile Iron |
| 12 | Sealing Ring | EPDM |
| 13 | Retaining Ring | C95400 |
| 14 | Gland | Ductile Iron |
| 15 | Post Flange | Ductile Iron |
| 16 | Wrench Nut | Ductile Iron |
| 17 | Bolt | Stainless Steel 304 or Steel 1045 |
| 18 | Washer | Stainless Steel 304 or Steel 1045 |
| 19 | Hexagon Socket Screw | Stainless Steel 304 or Steel 1045 |
| 20 | Stem Nut | CF8 or C95400 |

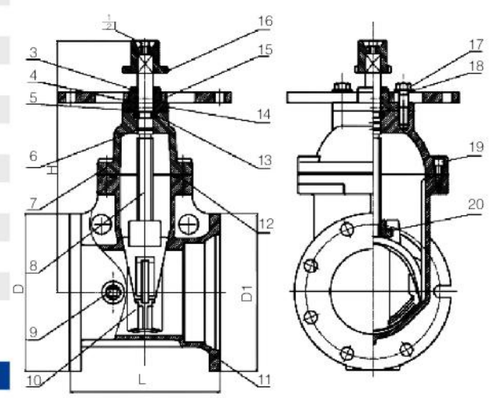


### Dimensions

| Size | DN | L | D | D1 | H |
|---|---|---|---|---|---|
| 2" | 50 | 178 | 152 | 152 | 265 |
| 3" | 80 | 203 | 191 | 195 | 322 |
| 4" | 100 | 229 | 229 | 232 | 342 |
| 6" | 150 | 267 | 279 | 282 | 448 |
| 8" | 200 | 292 | 343 | 340 | 534 |
| 10" | 250 | 330 | 406 | 399 | 635 |
| 12" | 300 | 356 | 483 | 456 | 720 |



# Z485-300A Gate Valve



## Resilient Wedge NRS Gate Valve - Grooved ×Flanged End

### Technical Features

- Nominal Pressure: 300PSI
- Conforms: ANSI/AWWA C515 Standard
- Sizes: 2", 3", 4", 6, 8", 10", 12"
- 2" FM only
- Mechanical Standard: ANSI/AWWA 110 or ANSI/AWWA C153
- Approvals: FM, UL, CUL, NS F/ ANSI 61 & NSF / ANSI 372
- Maximum Working Pressure: 300PSI (Maximum Testing Pressure: 600PSI) conforms to UL262, ULC / ORD C262-92, FM 1120 / 1130
- Maximum Working Temperature: 80℃ / 176°F
- Coating Details: Epoxy coated interior and exterior by Electrostatic Spray or Coating upon request
- Certified lead-free by NSF/ANSI 61 & NSFIANSI 372 is available
- With and Without Post Flange are available

### Valve Material List

| No. | Description | Material |
|---|---|---|
| 1 | Flat Washer | Steel 1045 or Stainless Steel 304 |
| 2 | Hexagon Socket Screw | Steel 1045 or Stainless Steel 304 |
| 3 | Sealing Ring | EPDM |
| 4 | O-Ring | EPDM |
| 5 | Sealing Ring | EPDM |
| 6 | O-Ring | EPDM |
| 7 | Bonnet | Ductile Iron |
| 8 | Stem | Stainless Steel 304 or C95400 |
| 9 | Plug | Stainless Steel 304 or C95400 |
| 10 | Disc | Ductile Iron +EPDM |
| 11 | Body | Ductile Iron |
| 12 | Sealing Ring | EPDM |
| 13 | Retaining Ring | C95400 |
| 14 | Gland | Ductile Iron |
| 15 | Post Flange | Ductile Iron |
| 16 | Wrench Nut | Ductile Iron |
| 17 | Bolt | Stainless Steel 304 or Steel 1045 |
| 18 | Washer | Stainless Steel 304 or Steel 1045 |
| 19 | Hexagon Socket Screw | Steel 1045 or Stainless Steel 304 |
| 20 | Stem Nut | CF8 or C95400 |

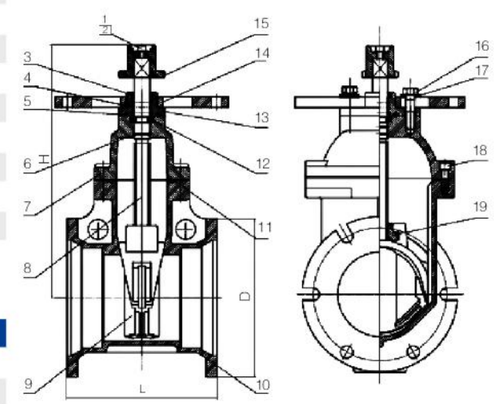


### Dimensions

| Size | DN | L | D | H |
|---|---|---|---|---|
| 2" | 50 | 178 | 152 | 265 |
| 3" | 80 | 203 | 195 | 322 |
| 4" | 100 | 229 | 232 | 342 |
| 6" | 150 | 267 | 282 | 448 |
| 8" | 200 | 292 | 340 | 534 |
| 10" | 250 | 330 | 399 | 635 |
| 12" | 300 | 356 | 456 | 720 |

# Z45-300A Gate Valve

## Resilient Wedge NRS Gate Valve - Flanged End

### Technical Features

- Nominal Pressure: 300PSI
- Conforms: ANSI/AWWA C515 Standard
- Face to Face Standard: ASME B16.10
- Sizes: 2", 2 1/2", 3", 4", 5", 6", 8", 10", 12"
- 2" FM only
- Flange Standard: ASME / ANSI B16.1 Class 125 or ASME / ANSI B16.42 Class 150 or BS EN1092-2 PN16 or GB/T9113.1
- Approvals: FM, UL, CUL, NSF / ANSI 61 & NSF / ANSI 372
- Maximum Working Pressure: 300PSI (Maximum Testing Pressure: 600PSI) conforms to UL262, ULC/ORD C262-92, FM 1120 /1130
- Maximum Working Temperature: 80℃ / 176°F
- Coating Details: Epoxy coated interior and exterior by Electrostatic Spray or Coating upon request
- NPT plug on body with 2 operating nuts
- Certified lead-free by NSF / ANSI 61 & NSF / ANSI 372 is available
- With and Without Post Flange are available

### Valve Material List

| No. | Description | Material |
|---|---|---|
| 1 | Flat Washer | Steel 1045 or Stainless Steel 304 |
| 2 | Hexagon Socket Screw | Steel 1045 or Stainless Steel 304 |
| 3 | Sealing Ring | EPDM |
| 4 | O-ring | EPDM |
| 5 | Sealing Ring | EPDM |
| 6 | O-ring | EPDM |
| 7 | Bonnet | Ductile Iron |
| 8 | Stem | Steel 1045 or Stainless Steel 304 |
| 9 | Plug | Steel 1045 or Stainless Steel 304 |
| 10 | Disc | Ductile Iron+EPDM |
| 11 | Body | Ductile Iron |
| 12 | Sealing Ring | EPDM |
| 13 | Retaining Ring | C95400 |
| 14 | Gland | Ductile Iron |
| 15 | Post Flange | Ductile Iron |
| 16 | Wrench Nut | Ductile Iron |
| 17 | Bolt | Stainless Steel 304 or Steel 1045 |
| 18 | Washer | Stainless Steel 304 or Steel 1045 |
| 19 | Hexagon Socket Screw | Stainless Steel 304 or Steel 1045 |
| 20 | Stem Nut | CF8 or C95400 |

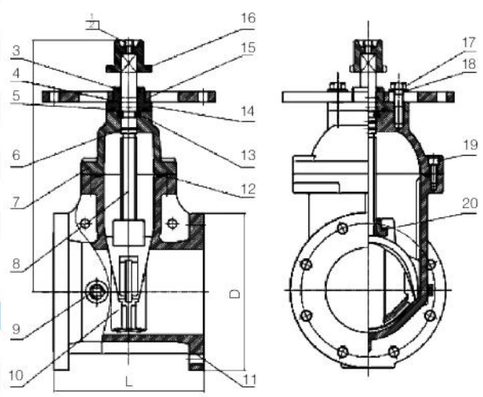


### Dimensions

| Size | DN | L | D | H |
|---|---|---|---|---|
| 2" | 50 | 178 | 152 | 265 |
| 2 1/2" | 65 | 190 | 178 | 292 |
| 3" | 80 | 203 | 191 | 322 |
| 4" | 100 | 229 | 229 | 342 |
| 5" | 125 | 254 | 254 | 412 |
| 6" | 150 | 267 | 279 | 448 |
| 8" | 200 | 292 | 343 | 534 |
| 10" | 250 | 330 | 406 | 635 |
| 12" | 300 | 356 | 483 | 720 |



# Z85-300A Gate Valve

## Resilient Wedge NRS Gate Valve - Grooved End

### Technical Features

- Nominal Pressure:300PSI
- Conforms: ANSI/AWWA C515 Standard
- Groove Standard: ANSI/AWWA C60 or Metric
- Face to Face Standard: ASME B16.10
- Sizes: 21/2", 3", 4", 5", 6", 8", 10", 12"
- Approvals: FM, UL, CUL, NSF /ANSI 61 & NSF / ANSI 372
- Maximum Working Pressure: 300PSI (Maximum Testing Pressure: 600PSI) conforms to UL262, ULC/ORD C262-92, FM 1120/1130
- Maximum Working Temperature: 80° C /176F
- Coating Details: Epoxy coated interior and exterior by Electrostatic Spray or Coating upon request
- NPT plug on body with 2 operating nuts
- Certified lead-free by NSFIANSI 61 & NSFIANSI 372 is available
- With and Without Post Flange are available

### Valve Material List

| No. | Description | Material |
|---|---|---|
| 1 | Flat Washer | Steel 1045 or Stainless Steel 304 |
| 2 | Hexagon Socket Screw | Steel 1045 or Stainless Steel 304 |
| 3 | Sealing Ring | EPDM |
| 4 | O-Ring | EPDM |
| 5 | Sealing Ring | EPDM |
| 6 | O-Ring | EPDM |
| 7 | Bonnet | Ductile Iron |
| 8 | Stem | Stainless Steel 304 or C95400 |
| 9 | Plug | Stainless Steel 304 or C95400 |
| 10 | Disc | Ductile Iron +EPDM |
| 11 | Body | Ductile Iron |
| 12 | Sealing Ring | EPDM |
| 13 | Retaining Ring | C95400 |
| 14 | Gland | Ductile Iron |
| 15 | Post Flange | Ductile Iron |
| 16 | Wrench Nut | Ductile Iron |
| 17 | Bolt | Stainless Steel 304 or Steel 1045 |
| 18 | Washer | Stainless Steel 304 or Steel 1045 |
| 19 | Hexagon Socket Screw | Steel 1045 or Stainless Steel 304 |
| 20 | Stem Nut | CF8 or C95400 |

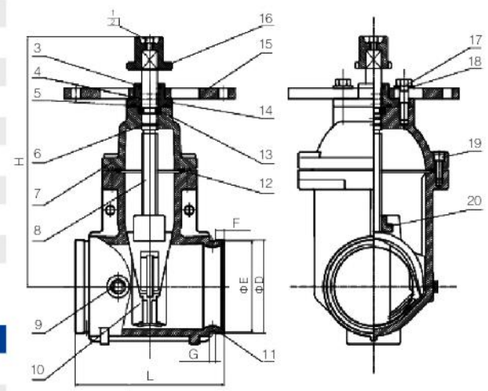


### Dimensions

| Size | DN | L | F | D | E | G | H |
|---|---|---|---|---|---|---|---|
| 21/2" | 65 | 190 | 15.9 | 73<br>76.1 | 69.1<br>72.3 | 7.9 | 292 |
| 3" | 80 | 203 | 15.9 | 88.9 | 84.9 | 7.9 | 322 |
| 4" | 100 | 229 | 15.9 | 114.3 | 110.1 | 9.5 | 342 |
| 5" | 125 | 254 | 15.9 | 139.7<br>141.3 | 135.5<br>137 | 9.5 | 412 |
| 6" | 150 | 267 | 15.9 | 165.1<br>168.3 | 160.8<br>163.9 | 9.5 | 448 |
| 8" | 200 | 292 | 19 | 216.3<br>219.1 | 211.6<br>214.3 | 11.1 | 534 |
| 10" | 250 | 330 | 19 | 273 | 268.3 | 12.7 | 635 |
| 12" | 300 | 356 | 19 | 323.9 | 318.3 | 12.7 | 720 |

# Model: Z41Gate Valve

## Resilient Wedge OS & Y Gate Valve - Flanged End

### Technical Features

- Nominal Pressure: 200PSI
- Flange Standard: ASME/ANSI B161 Class 125 or ASME / ANS B16.42 Class 150 or BS EN1092–2 PN16 or GB/T9113.1
- Face to Face Standard: ASME B16.10
- Sizes: 2", 2", 3", 4", 5", 6", 8", 10", 12" with FM UL CUL
- 14", 16" with FM only
- Approvals: FM, UL, CUL, NSF/ANSI 61 & NSF / ANSI 372
- Maximum Working Pressure: 200PSI (Maximum Testing Pressure: 400PSI) conforms to UL 262, ULC / ORD C262–92, FM 1120 / 1130
- Maximum Working Temperature: 80℃ / 176°F
- Coating Details: Epoxy coated interior and exterior by Electrostatic Spray or Coating upon request
- NPT plug on body with 2 operating nuts
- Certified lead–free by NSF /ANSI 61 & NSF / ANSI 372 is available

### Valve Material List

| No. | Description | Material |
|---|---|---|
| 1 | Body | Ductile Iron |
| 2 | Disc | Ductile Iron +EPDM |
| 3 | Connecting Part | C95400 |
| 4 | Sealing Pad | EPDM |
| 5 | Stem | Stainless Steel 304 |
| 6 | Yoke | Ductile Iron |
| 7 | Bolt | Steel 1045 |
| 8 | Gland | Ductile Iron |
| 9 | Nut | Steel 1045 |
| 10 | Rotating Nut | C95400 |
| 11 | Handwheel | Steel 1045 |
| 12 | Lock Nut | Steel 1045 |
| 13 | Countersunk Head Bolt | Steel 1045 |
| 14 | Cylinder Pin | Stainless Steel 304 |

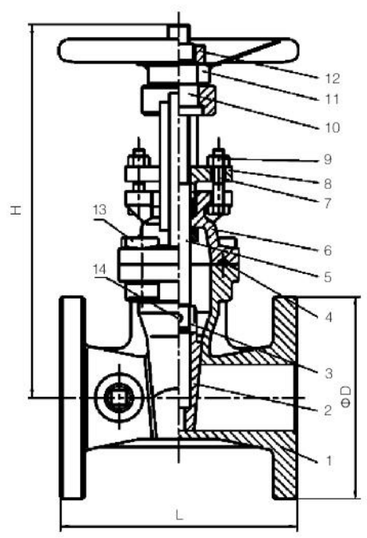


### Dimensions

| Size | L | H | ΦD |
|---|---|---|---|
| 2" | 178 | 313 | 152 |
| 2½" | 190 | 340 | 178 |
| 3" | 203 | 387 | 191 |
| 4" | 229 | 440 | 229 |
| 5" | 254 | 546 | 254 |
| 6" | 267 | 607 | 279 |
| 8" | 292 | 786 | 343 |
| 10" | 330 | 946 | 406 |
| 12" | 356 | 1110 | 483 |



# Z45 Gate Valve

## Resilient Wedge NRS Gate Valve - Flanged End

### Technical Features

- Nominal Pressure: 200PSI
- Flange Standard: ASME / ANSI B16.1 Class 125 or ASME / ANSI B 16.42 Class 150 or BS EN1092–2 PN16 or GB /T9113.1
- Face to Face Standard: ASME B16.10
- Sizes: 2", 2½", 3", 4", 5", 6", 8", 10", 12"
- Approvals: FM, UL, CUL, NSF / ANSI 61 & NSF / ANSI 372
- 2" without UL, CUL
- Maximum Working Pressure: 200PSI (Maximum Testing Pressure: 400PSI) conforms to UL 262, ULC /ORD C262–92, FM 1120 / 1130
- Maximum Working Temperature: 80℃ / 176°F
- Coating Details: Epoxy coated interior and exterior by Electrostatic Spray or Coating upon request
- NPT plug on body with 2 operating nuts
- Certified lead–free by NSF/ANSI 61& NSFIANSI 372 is available

### Valve Material List

| No. | Description | Material |
|---|---|---|
| 1 | Body | Ductile Iron |
| 2 | Disc | Ductile Iron+EPDM |
| 3 | Nut | C95400 |
| 4 | Gasket | EPDM |
| 5 | Stem | Stainless Steel 304 |
| 6 | Cap | Ductile Iron |
| 7 | Retainer Ring | C95400 |
| 8 | O–ring | EPDM |
| 9 | Wrench Nut | Ductile Iron |
| 10 | Minipad | Steel 1045 |
| 11 | Bolt | Steel 1045 |
| 12 | Stud | Steel 1045 |
| 13 | Nut | Steel 1045 |
| 14 | Flat Washer | Steel 1045 |
| 15 | Coupling Flange | Ductile Iron |
| 16 | Platen | Ductile Iron |
| 17 | Countersunk Head Bolt | Steel 1045 |

### Dimensions

| Size | L | H | ΦD |
|---|---|---|---|
| 2" | 178 | 265 | 152 |
| 2½" | 190 | 289 | 178 |
| 3" | 203 | 326 | 191 |
| 4" | 229 | 355 | 229 |
| 5" | 254 | 410 | 254 |
| 6" | 267 | 455 | 279 |
| 8" | 292 | 558 | 343 |
| 10" | 330 | 648 | 406 |
| 12" | 356 | 745 | 483 |

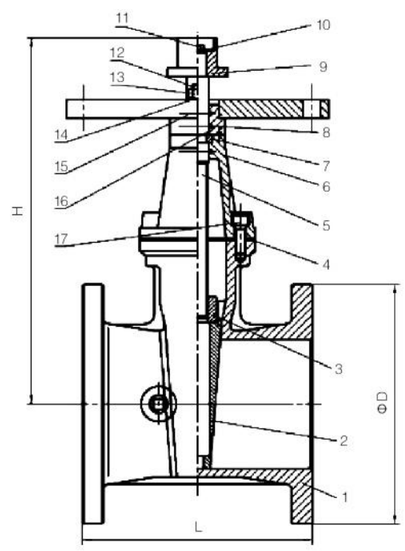

## Resilient Wedge OS & Y Gate Valve - Grooved End

### Technical Features

- Nominal Pressure: 200PSI
- Groove Standard: ANSI/AWWA C606 or Metric
- Face to Face Standard: ASME B16.10
- Sizes: 2", 2 1/2", 3", 4", 5", 6", 8", 10", 12"
- Approvals: FM, UL, CUL, NSF / ANSI 61 & NSF / ANSI 372
- Maximum Working Pressure: 200PSI (Maximum Testing Pressure: 400PSI) conforms to UL 262, ULC / ORD C262–92, FM 1120 /1130
- Maximum Working Temperature: 80℃ / 176°F
- Coating Details: Epoxy coated interior and exterior by Electrostatic Spray or Coating upon request
- NPT plug on body with 2 operating nuts
- Certified lead–free by NSF / ANSI 61 & NSF / ANSI 372 is available

### Valve Material List

| No. | Description | Material |
|---|---|---|
| 1 | Body | Ductile Iron |
| 2 | Disc | Ductile Iron +EPDM |
| 3 | Connecting Part | C95400 |
| 4 | Sealing Pad | EPDM |
| 5 | Stem | Stainless Steel 304 |
| 6 | Yoke | Ductile Iron |
| 7 | Bolt | Steel 1045 |
| 8 | Gland | Ductile Iron |
| 9 | Nut | Steel 1045 |
| 10 | Rotating Nut | C95400 |
| 11 | Handwheel | Steel 1045 |
| 12 | Lock Nut | Steel 1045 |
| 13 | Countersunk Head Bolt | Steel 1045 |
| 14 | Cylinder Pin | Stainless Steel 304 |

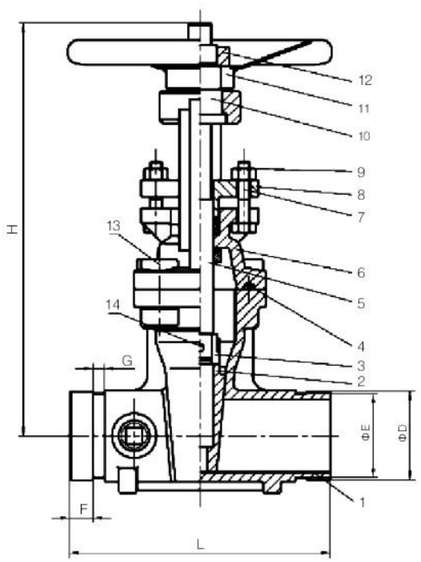


### Dimensions

| Size | L | H | ΦD | ΦE | F | G |
|---|---|---|---|---|---|---|
| 2" | 178 | 313 | 60.3 | 57.2 | 15.9 | 7.9 |
| 2 1/2" | 190 | 340 | 76.1 | 72.3 | 15.9 | 7.9 |
| 3" | 203 | 387 | 88.9 | 84.9 | 15.9 | 7.9 |
| 4" | 229 | 440 | 114.3 | 110.1 | 15.9 | 9.5 |
| 5" | 254 | 546 | 141.3 | 137 | 15.9 | 9.5 |
| 6" | 267 | 607 | 168.3 | 163.9 | 15.9 | 9.5 |
| 8" | 292 | 786 | 219.1 | 214.4 | 19 | 11.1 |
| 10" | 330 | 946 | 273 | 268.3 | 19 | 12.7 |
| 12" | 356 | 1110 | 323.9 | 318.3 | 19 | 12.7 |





## Resilient Wedge NRS Gate Valve - Grooved End

### Technical Features

- Nominal Pressure: 200PSI
- Groove standard : ANSI / AWWA C606 or Metric
- Face to Face Standard: ASME B16.10
- Sizes: 2", 2 1/2", 3", 4", 5", 6", 8", 10", 12"
- Approvals: FM, UL, CUL, NSF / ANSI 61 & NSF / ANSI 3722
- 2" without UL, CUL
- Maximum Working Pressure: 200PSI (Maximum Testing Pressure: 400PSI) conforms to UL 262, ULC / ORD C262–92FM 1120 /1130
- Maximum Working Temperature: 80℃ / 176° F
- Coating Details: Epoxy coated interior and exterior by Electrostatic Spray or Coating upon request
- NPT plug on body with 2 operating nuts
- Certified lead–free by NSF / ANSI 61 & NSF / ANSI 372 is available

### Valve Material List

| No. | Description | Material |
|---|---|---|
| 1 | Body | Ductile Iron |
| 2 | Disc | Ductile Iron+EPDM |
| 3 | Nut | C95400 |
| 4 | Gasket | EPDM |
| 5 | Stem | Stainless Steel 304 |
| 6 | Cap | Ductile Iron |
| 7 | Retainer Ring | C95400 |
| 8 | O–ring | EPDM |
| 9 | Wrench Nut | Ductile Iron |
| 10 | Minipad | Steel 1045 |
| 11 | Bolt | Steel 1045 |
| 12 | Stud | Steel 1045 |
| 13 | Nut | Steel 1045 |
| 14 | Flat Washer | Steel 1045 |
| 15 | Coupling Flange | Ductile Iron |
| 16 | Platen | Ductile Iron |
| 17 | Countersunk Head Bolt | Steel 1045 |

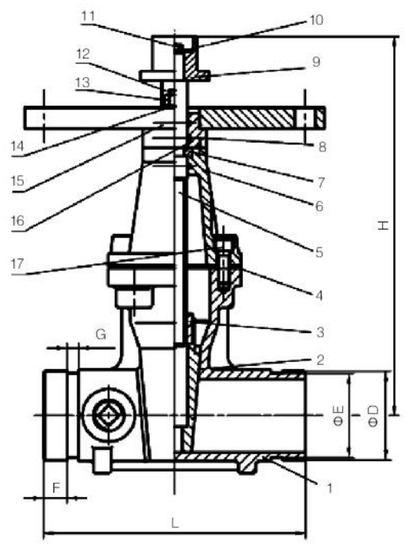


### Dimensions

| Size | L | H | ΦD | ΦE | F | G |
|---|---|---|---|---|---|---|
| 2" | 178 | 265 | 60.3 | 57.15 | 15.9 | 7.9 |
| 2 1/2" | 190 | 289 | 76.1 | 72.3 | 15.9 | 7.9 |
| 3" | 203 | 326 | 88.9 | 84.9 | 15.9 | 7.9 |
| 4" | 229 | 355 | 114.3 | 110.1 | 15.9 | 9.5 |
| 5" | 254 | 410 | 141.3 | 137 | 15.9 | 9.5 |
| 6" | 267 | 455 | 168.3 | 163.9 | 15.9 | 9.5 |
| 8" | 292 | 558 | 219.1 | 214.4 | 19 | 11.1 |
| 10" | 330 | 648 | 273 | 268.3 | 19 | 12.7 |
| 12" | 356 | 745 | 323.9 | 318.3 | 19 | 12.7 |

# MH-XQH-300 Swing Check Valve

## 300PSI Flanged Swing Check Valve

### Technical Features

- Nominal Pressure: 300PSI
- Conforms: AWWA C508
- Flange Standard: ASME / ANSI B16.1 Class 125 or ASME / ANSI B16.42 Class 150 or BS EN1092–2 PN16 or GB/T9113.1
- Sizes: 2", 2 1/2", 3", 4", 5", 6", 8", 10, 12"
- Face to Face Standard: ASME B16.10
- Approvals: UL, FM
- Maximum Working Pressure: 300PSI (Maximum TestingPressure: 600PSI) conforms to UL 312 & FM Class 1210
- Working Temperature: 80℃ / 176° F
- Coating Details: Epoxy coated interior and exterior by Electrostatic Spray or coating upon request
- Applications:
  Used both vertically and horizontally;
  Used in one–way flow pipeline to prevent the water from back flow

### Valve Material List

| No. | Description | Material |
|---|---|---|
| 1 | Body | Ductile Iron |
| 2 | Bonnet | Ductile Iron |
| 3 | Seat Ring | C95400 |
| 4 | Disc | Ductile Iron+EPDM |
| 5 | Rocker Arm | Ductile Iron |
| 6 | Baffle Plate | C95400 |
| 7 | Middle Stem | Stainless Steel 304 |
| 8 | Stem | Stainless Steel 304 |
| 9 | Bracket Screw | Stainless Steel 304 |
| 10 | Plug | C95400 |
| 11 | Gasket | Stainless Steel 304 |
| 12 | O–ring | EPDM |
| 13 | O–ring | EPDM |
| 14 | O–ring | EPDM |
| 15 | O–ring | EPDM |
| 16 | Bronze Bushing | Powder Metallurgy |
| 17 | Nut | Stainless Steel 304 |
| 18 | Nut | Stainless Steel 304 |
| 19 | Cotter Pin | Stainless Steel 304 |
| 20 | Bolt | Steel 1045 |
| 21 | Bolt | Steel 1045 |
| 22 | Nut | Steel 1045 |

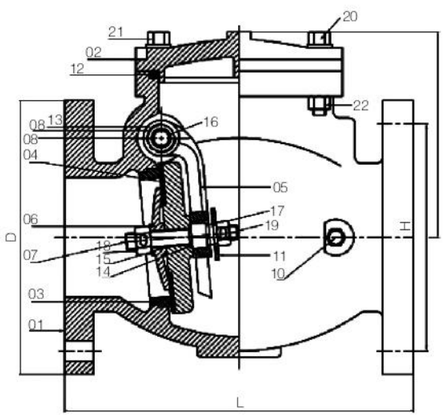


### Dimensions

| Size | DN | L | D | H |
|---|---|---|---|---|
| 2" | 50 | 203 | 152 | 142 |
| 2 1/2" | 65 | 216 | 178 | 148 |
| 3" | 80 | 241 | 191 | 163.5 |
| 4" | 100 | 292 | 229 | 172 |
| 5" | 125 | 330 | 254 | 237 |
| 6" | 150 | 356 | 279 | 233 |
| 8" | 200 | 495 | 343 | 301 |
| 10" | 250 | 622 | 406 | 348 |
| 12" | 300 | 698 | 483 | 419 |





# MH-XQH-350G Swing Check Valve

## 350PSI Grooved Swing Check Valve

### Technical Features

- Nominal Pressure: 350PSI
- Groove standard: ANSI/AWWA C606 or Metric
- Sizes: 2", 2 1/2", 3", 4", 5", 6", 8", 10", 12"
- Approvals: UL, FM
- Flange Standard: ASME / ANSI B16.1 Class 125 or ASME/ANSI B16.42 Class 150 or BS EN10922 PN16 or GB/T91131
- Maximum Working Pressure: 350PSI (Maximum TestingPressure: 700 PSI) conforms to UL 312 & FM Class 1210
- Maximum Working Temperature: 80℃ / 176°F
- Coating Details: Epoxy coated interior and exterior by Electrostatic Spray or coating upon request
- Applications: Used in one–way flow pipeline to prevent the water from back flow
- Other Connections: Flange*Flange; Groove*Flange; Flange*Groove

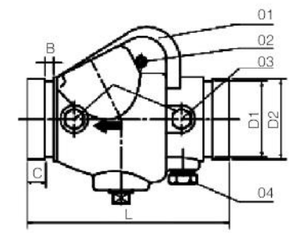


### Valve Material List

| No. | Description | Material |
|---|---|---|
| 1 | Body | Ductile Iron |
| 2 | Bolt | Steel 1045 |
| 3 | Plug | Steel 1045 |
| 4 | Plug | Steel 1045 |
| 5 | Spring | Stainless Steel 304 |
| 6 | Hinge Pin | Stainless Steel 304 / Ductile Iron |
| 7 | Clapper | Stainless Steel 304 |
| 8 | Seat | C95400 |
| 9 | Clamping Ring | Stainless Steel 304 |
| 10 | Locknut | Stainless Steel 304 |
| 11 | Facing Seal | EPDM |
| 12 | Gasket | EPDM |
| 13 | Bolt | Stainless Steel 304 |
| 14 | Plug | Steel 1045 |

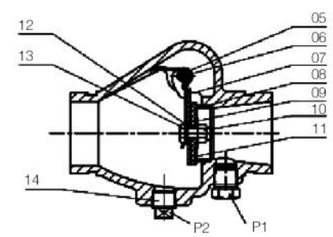


### Dimensions

| Size | L | D1 | D2 | B | C | P1 | P2 | | | | | | P3 | | |
|---|---|---|---|---|---|---|---|---|---|---|---|---|---|---|---|
| 2" | 169 | 57.15 | 60.3 | 7.95 | 15.88 | RC1/2–14 | RC1/2–14 | RC3/4–14 | RC1–11 | RC1 1/2–11 | RC1 1/2–11 | RC2–11 | RC1/4–19 | RC3/8–19 | RC1/2–14 |
| | | | | | | 1/2–14NPT | 1/2–14NPT | 3/4–14NPT | 1–11.5NPT | 1 1/4–11.5NPT | 1 1/2–11.5NPT | 2–11.5NPT | 1/4–18NPT | 3/8–18NPT | 1/2–14NPT |
| 2 1/2" | 181 | 69.09 | 73 | 7.95 | 15.88 | RC1/2–14 | RC1/2–14 | RC3/4–14 | RC1–11 | RC1 1/4–11 | RC1 1/2–11 | RC2–11 | RC1/4–19 | RC3/8–19 | RC1/2–14 |
| | | 72.26 | 76.1 | | | 1/2–14NPT | 1/2–14NPT | 3/4–14NPT | 1–11.5NPT | 1 1/4–11.5NPT | 1 1/2–11.5NPT | 2–11.5NPT | 1/4–18NPT | 3/8–18NPT | 1/2–14NPT |
| 3" | 198 | 84.94 | 88.9 | 7.95 | 15.88 | RC1/2–14 | RC1/2–14 | RC3/4–14 | RC1–11 | RC1 1/4–11 | RC1 1/2–11 | RC2–11 | RC1/4–19 | RC3/8–19 | RC1/2–14 |
| | | | | | | 1/2–14NPT | 1/2–14NPT | 3/4–14NPT | 1–11.5NPT | 1 1/4–11.5NPT | 1 1/2–11.5NPT | 2–11.5NPT | 1/4–18NPT | 3/8–18NPT | 1/2–14NPT |
| 4" | 214 | 110.08 | 114.3 | 9.53 | 15.88 | RC1/2–14 | RC1/2–14 | RC3/4–14 | RC1–11 | RC1 1/4–11 | RC1 1/2–11 | RC2–11 | RC1/4–19 | RC3/8–19 | RC1/2–14 |
| | | | | | | 1/2–14NPT | 1/2–14NPT | 3/4–14NPT | 1–11.5NPT | 1 1/4–11.5NPT | 1 1/2–11.5NPT | 2–11.5NPT | 1/4–18NPT | 3/8–18NPT | 1/2–14NPT |
| 5" | 248 | 135.48 | 139.7 | 9.53 | 15.88 | RC1/2–14 | RC1/2–14 | RC3/4–14 | RC1–11 | RC1 1/4–11 | RC1 1/2–11 | RC2–11 | RC1/4–19 | RC3/8–19 | RC1/2–14 |
| | | 137.03 | 141.3 | | | 1/2–14NPT | 1/2–14NPT | 3/4–14NPT | 1–11.5NPT | 1 1/4–11.5NPT | 1 1/2–11.5NPT | 2–11.5NPT | 1/4–18NPT | 3/8–18NPT | 1/2–14NPT |
| 6" | 270 | 160.78 | 165.1 | 9.53 | 15.88 | RC1/2–14 | RC1/2–14 | RC3/4–14 | RC1–11 | RC1 1/4–11 | RC1 1/2–11 | RC2–11 | RC1/4–19 | RC3/8–19 | RC1/2–14 |
| | | 163.96 | 168.3 | | | 1/2–14NPT | 1/2–14NPT | 3/4–14NPT | 1–11.5NPT | 1 1/4–11.5NPT | 1 1/2–11.5NPT | 2–11.5NPT | 1/4–18NPT | 3/8–18NPT | 1/2–14NPT |
| 8" | 325 | 211.6 | 216.3 | 11.13 | 19.05 | RC1/2–14 | RC1/2–14 | RC3/4–14 | RC1–11 | RC1 1/4–11 | RC1 1/2–11 | RC2–11 | RC1/4–19 | RC3/8–19 | RC1/2–14 |
| | | 214.4 | 219.1 | | | 1/2–14NPT | 1/2–14NPT | 3/4–14NPT | 1–11.5NPT | 1 1/4–11.5NPT | 1 1/2–11.5NPT | 2–11.5NPT | 1/4–18NPT | 3/8–18NPT | 1/2–14NPT |
| 10" | 457 | 268.3 | 273 | 12.7 | 19.05 | RC1/2–14 | RC1/2–14 | RC3/4–14 | RC1–11 | RC1 1/4–11 | RC1 1/2–11 | RC2–11 | RC1/4–19 | RC3/8–19 | RC1/2–14 |
| | | | | | | 1/2–14NPT | 1/2–14NPT | 3/4–14NPT | 1–11.5NPT | 1 1/4–11.5NPT | 1 1/2–11.5NPT | 2–11.5NPT | 1/4–18NPT | 3/8–18NPT | 1/2–14NPT |
| 12" | 535 | 318.3 | 323.9 | 12.7 | 19.05 | RC1/2–14 | RC1/2–14 | RC3/4–14 | RC1–11 | RC1 1/4–11 | RC1 1/2–11 | RC2–11 | RC1/4–19 | RC3/8–19 | RC1/2–14 |
| | | | | | | 1/2–14NPT | 1/2–14NPT | 3/4–14NPT | 1–11.5NPT | 1 1/4–11.5NPT | 1 1/2–11.5NPT | 2–11.5NPT | 1/4–18NPT | 3/8–18NPT | 1/2–14NPT |

# QSCZG Wall Type Indicator Post

## Technical Features

- Approvals: UL, CUL, FM
- Conforms to UL789 & ULC / ORD–C789 & FM1110
- Used to Operate a Valve Installed Behind the Wall

## Operation Manual

- Adjust the length of the connecting rod according to the depth of gate valve and cut off the excessive part
- Install the indicator post to the wall
- Connect the indicator post and gate valve which is in the closed position
- Adjust the indicator to the position of "SHUT"

## Material List

| No. | Description | Material |
|---|---|---|
| 1 | Joint | Cast Iron |
| 2 | Cotter Pin | Steel 1035 |
| 3 | Driving Rod | Steel 1045 |
| 4 | Main Body | Cast Iron |
| 5 | Indicator Plate | A413.0 |
| 6 | Nut, Gasket | Steel 1035 |
| 7 | Stud Bolt | Steel 1035 |
| 8 | Position Bracket | Stainless Steel 304 |
| 9 | Driver | Stainless Steel 304 |
| 10 | Retainer Ring For Stem | 1566 |
| 11 | Upper Cover | Cast Iron |
| 12 | Handwheel | Cast Iron |
| 13 | Gasket | A283 Gr.C |
| 14 | Lift Ring | Steel 1035 |
| 15 | Screw | Steel 1035 |
| 16 | Nut | Steel 1035 |
| 17 | Bolt | Steel 1035 |
| 18 | Screwed Plug | Steel 1035 |
| 19 | Bolt, Flat Gasket | Stainless Steel 304 |
| 20 | Keyhole Plate | A283 Gr.C |
| 21 | Keyhole | Organic Glass |
| 22 | Keyhole Plate Gasket | EPDM |

## 3D Pictures

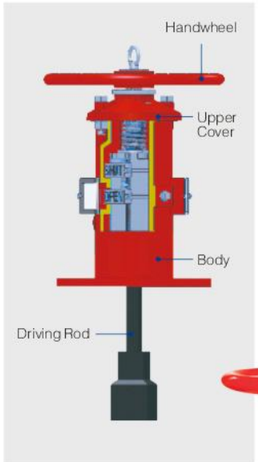

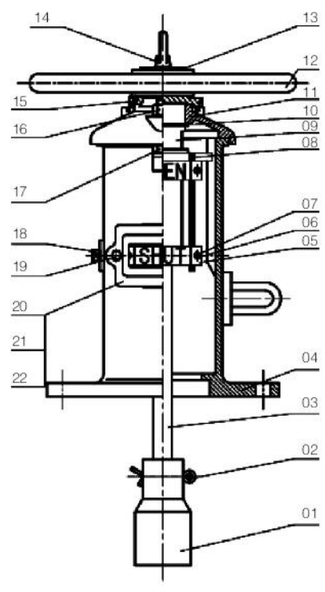




# MH-AMARV Air Release Valves



## Technical Features

- Designed, manufactured: Accordance with UL 2573 / Fm1344
- Test Standard: UL 2573 / FM1344
- Temperature: 0 to 100℃
- Normal size: 1"
- Normal Pressure: 175PSI
- Test Pressure: Leakage Test 7PSI / 263PSI, Strength Test 350PSI
- Use in wet pipe sprinkler systems, or with horizontal split case pumps
- The inlets of the valves are 1–11 1/2NPT or Rc 1, the outlets of the valves are 1/2–14NPT or Rc 1/2
- Advantages: This valve can ensure the excellent leak tightness and good venting capabilities under the rated working pressure

## Valve Material List

| No. | Description | Material |
|---|---|---|
| 1 | Body | Ductile Iron |
| 2 | Filter Screen | SS316 |
| 3 | Gasket Ring | Carbon Steel |
| 4 | Bonnet | Ductile Iron |
| 5 | Yoke | SS316 |
| 6 | Seat | SS316 |
| 7 | Bolt | SS316 |
| 8 | Valve Shaft | SS316 |
| 9 | E Type Retainer Ring | SS304 |
| 10 | Ball | SS316 |
| 11 | Big Protective Cover | Plastic |
| 12 | Lever | SS316 |
| 13 | Poppet | EPDM |
| 14 | Spring Washer | SS316 |
| 15 | Hex Socket Head Bolt | SS304 |
| 16 | Asbestos–free Gasket | CN–705 |
| 17 | Spring Washer | Carbon Steel |
| 18 | Bolt | Carbon Steel |
| 19 | Plug | Ductile Iron |
| 20 | Small Protective Cover | Plastic |

## Connections for Installation

- The inlet connections shall be made using the external threads of tapered pipe thread 1–11 1/2NP conforming to the standard ASME B 1.20.1–2013. and the outlet connections shall be made using the external threads of tapered pipe thread1/2–14NPT conforming to the standard ASME B 1.20.1–2013.
- The inlet connections shall be made using the external threads of tapered pipe thread R21 conform to the standard ISO 7–1–1994, and the outlet connections shall be made using the external threads of tapered pipe thread R2 1/2 conforming to the standard ISO 7–1–1994.

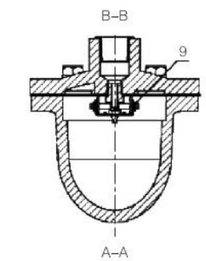


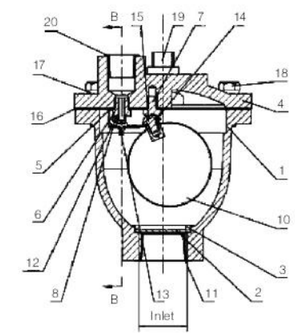


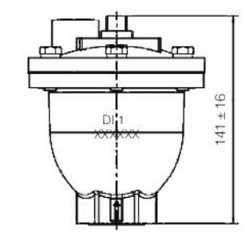


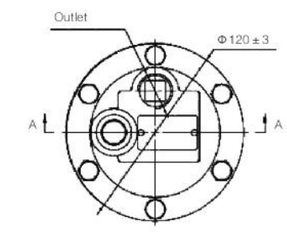

## Technical Features

- Size: DN50–DN200/2"–8"
- Working Pressure: 450PSI
- Sensitivity:

  FM: 1. No–alarm flow ≤15L/min

  2. Alarm flow >15L/min, ≤75L/min

  UL: 1. No–alarm flow ≤15L/min

  2. Alarm flow >15L/min, ≤37.5L/min
- Capacity of Switch Contacts:

  AC 125 / 250V 8A

  DC 24V 3A

  DC 30V 2.5A
- Working Temperature: 0–49℃
- Steel Pipe: SCH10–40
- 0–90 Seconds Field Replaceable Retard

## Technical Information

- I . Overview

  The vane type water flow switch use in wet pipe systems only. Water flow in the pipe deflects a vane, which produces a switched output usually after a specified delay
- II . Main Components

  ZSJZ series water flow indicator is mainly composed of the saddle, blade rack, bottom plate, outer cover, Air delay device, micro–switch, junction box, etc.

  1. The main outline drawing is shown in Figure 1 Outline Drawing.

  2. Main dimensions of water flow indicator are shown in Table 1.

3. Materials of the main components are shown in Table 2.

## Dimensions

| Model | Specification | INCH | L | H |
|---|---|---|---|---|
| ZSJZ–YM–450 | DN50 | 2" | 85 | 188 |
| ZSJZ–YM–450 | DN65 | 2½" | 92 | 200 |
| ZSJZ–YM–450 | DN80 | 3" | 106 | 220 |
| ZSJZ–YM–450 | DN100 | 4" | 134 | 245 |
| ZSJZ–YM–450 | DN125 | 5" | 162 | 272 |
| ZSJZ–YM–450 | DN150 | 6" | 189.5 | 298 |
| ZSJZ–YM–450 | DN200 | 8" | 240 | 350 |

Table 1

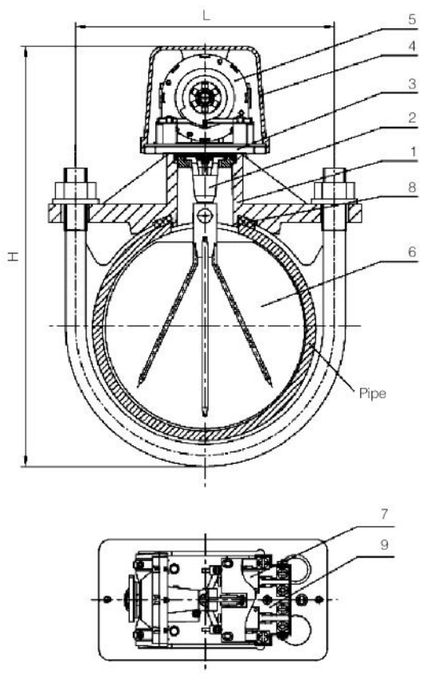


Figure 1 Outline Drawing





## Installation and Debugging as well as Precautions

- Installation of water flow indicator:

  At the pre–set installation position, use a tapper to drill on the main pipeline and remove burrs according to the product specification;

  Roll up the blade into a small size and put it into the pipeline, install the U–shaped bolt and fasten it up with two fastening nuts, and the specific installation drawing is shown in Figure 2.

## Materials of Main Components

| No. | Name | Material |
|---|---|---|
| 1 | Body | Ductile Iron |
| 2 | Blade Rack | SS304+EPDM |
| 3 | Bottom Plate | SS 304 |
| 4 | Outer Cover | Aluminum |
| 5 | Air Delay Device | Companent |
| 6 | Blade | LLDPE |
| 7 | Micro–switch | Component |
| 8 | Sealing Gasket | EPDM |
| 9 | Junction Box | PC |

Table 2

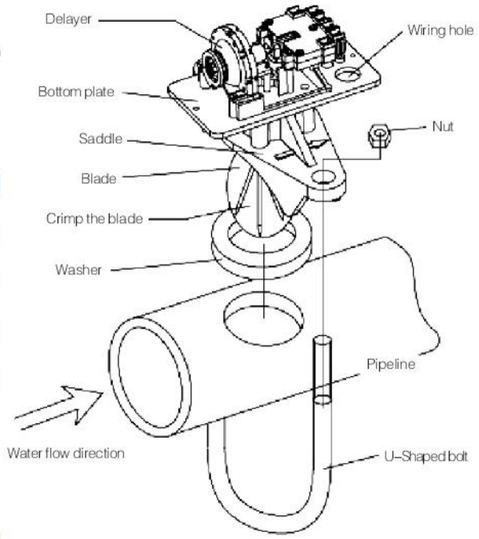


Figure 2 Installation Drawing

## The hole size is shown in Table 3

| Specification | Hole size |
|---|---|
| DN50, DN65 | 32+2mm |
| DN80–DN200 | 51+2mm |

Table 3

## The typical wiring diagram is shown in Figure 3

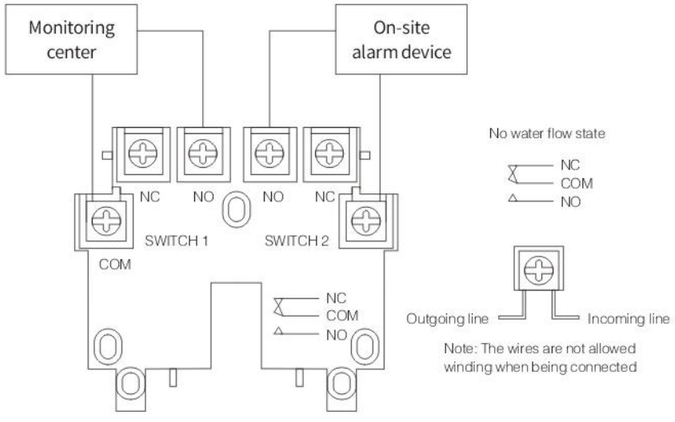


Figure 3

## Flange / Groove / Flange*Groove / Groove*Flange

### Technical Features

- Maximum Adjust Pressure: 200PSI–300PSI/PN10/PN16
- Flange Standard: ASME / ANSI B16.1 Class 125 or ASME / ANSI B16.42 Class 150 or BS EN1092–2 PN16 or GB/T9113.1
- Groove Standard: AWWA C606 / ISO 6182–12
- Working Temperature: 4℃–70℃
- Installation Height of the Gong According to Clients' requirements
- Gong can be Installed indoor or outdoor through wall as to clients' requirements
- External Dimensions for reference only
- Coating details: Epoxy coated interior and exterior by Electrostatic Spray or Coating upon request
- Alarm check valves use in wet pipe of sprinkler system. Fire protection system

### Material List

| No. | Name | Material | QTY. |
|---|---|---|---|
| 1 | Alarm Valve | | 1 |
| 2 | Orifice, retard | C954 / SS304 | 1 |
| 3 | Tee | Steel / SS304 | 2 |
| 4 | Nipple | Steel / SS304 | 6 |
| 5 | Union | Steel / SS304 | 1 |
| 6 | Nipple | Steel / SS304 | 1 |
| 7 | Y Strainer | C954 / SS304 | 1 |
| 8 | Retard Chamber | Steel | 1 |
| 9 | Gong Assembly | Component | 1 |
| 10 | Nipple | Steel / SS304 | 1 |
| 11 | Reducer Bushing | Steel / SS304 | 1 |
| 12 | Pressure Switch | Component | 1 |
| 13 | Cross | Steel / SS304 | 1 |
| 14 | Reducer Bushing | Steel / SS304 | 1 |
| 15 | Plug | Steel / C954 / SS304 | 1 |
| 16 | Cross | Steel / SS304 | 2 |
| 17 | Pressure Gauge | Component | 3 |
| 18 | 3–way Valve Gauge | C954 / SS304 | 3 |
| 19 | Plug | Steel / C954 / SS304 | 3 |
| 20 | Orifice, retard | C954 / SS304 | 1 |
| 21 | Check Valve | C954 / SS304 | 1 |
| 22 | Nipple | Steel / SS304 | 1 |
| 23 | Nipple | Steel / SS304 | 3 |
| 24 | Tee | Steel / SS304 | 2 |
| 25 | Nipple | Steel / SS304 | 4 |
| 26 | Nipple | Steel / SS304 | 1 |
| 27 | Nipple | Steel / SS304 | 1 |
| 28 | Ball Valve | C954 / SS304 | 1 |
| 29 | Nipple | Steel / SS304 | 1 |
| 30 | Ball Valve | C954 / SS304 | 1 |
| 31 | Elbow | Steel / SS304 | 2 |
| 32 | Nipple | Steel / SS304 | 1 |
| 33 | Ball Valve | C954 / Ss304 | 1 |

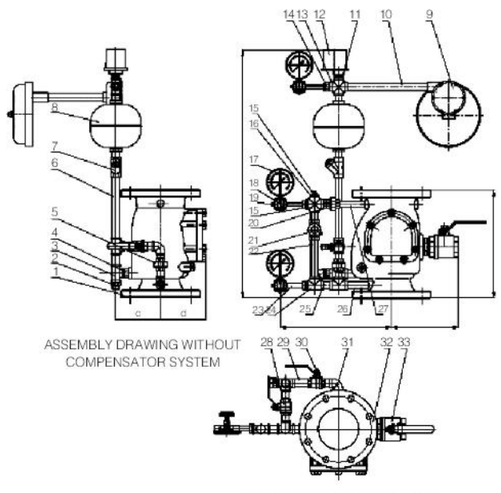


### Dimensions

| Size | a | b | c | d |
|---|---|---|---|---|
| 2" | 340 | 205 | 145 | 110 |
| 2½" | 340 | 205 | 145 | 110 |
| 3" | 340 | 205 | 145 | 110 |
| 4" | 342 | 250 | 160 | 136 |
| 5" | 349 | 274 | 180 | 162 |
| 6" | 349 | 274 | 180 | 162 |
| 8" | 415 | 290 | 205 | 195 |
| 10" | 475 | 340 | 240 | 235 |
| 12" | 495 | 368 | 270 | 270 |





### General Technical Information

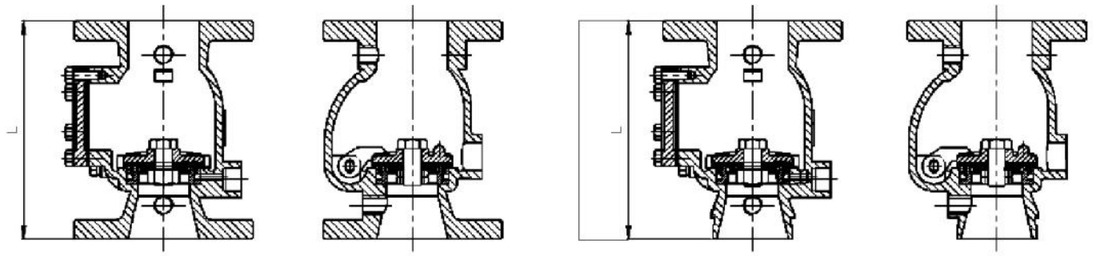

### Flange*Flange

**Dimensions Chart**

| Size | L(mm) | L(inch) |
|---|---|---|
| DN50(2") | 233 | 9.17 |
| DN65(2½") | 236 | 9.29 |
| DN80(3") | 245 | 9.65 |
| DN100(4") | 316 | 12.44 |
| DN125(5") | 386 | 15.20 |
| DN150(6") | 390 | 15.35 |
| DN200(8") | 438 | 17.24 |
| DN250(10") | 535 | 21.06 |
| DN300(12") | 622 | 24.49 |

### Flange*Groove

**Dimensions Chart**

| Size | L(mm) | L(inch) |
|---|---|---|
| DN50(2") | 239 | 9.41 |
| DN65(2½") | 240 | 9.45 |
| DN80(3") | 245 | 9.65 |
| DN100(4") | 316 | 12.44 |
| DN125(5") | 386 | 15.20 |
| DN150(6") | 390 | 15.35 |
| DN200(8") | 438 | 17.24 |
| DN250(10") | 535 | 21.06 |
| DN300(12") | 622 | 24.49 |

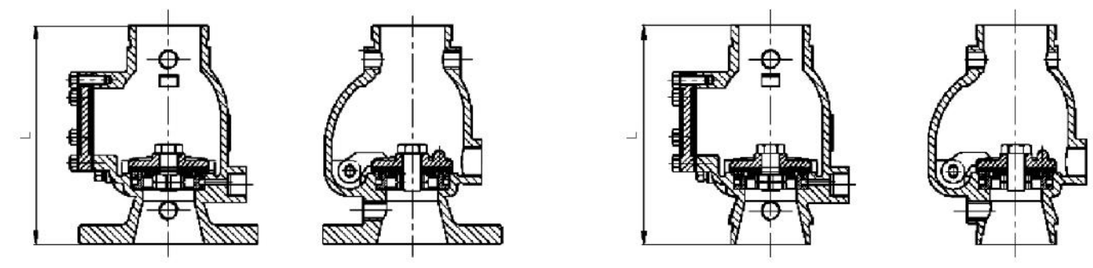

### Groove*Flange

**Dimensions Chart**

| Size | L(mm) | L(inch) |
|---|---|---|
| DN50(2") | 239 | 9.41 |
| DN65(2½") | 240 | 9.45 |
| DN80(3") | 245 | 9.65 |
| DN100(4") | 316 | 12.44 |
| DN125(5") | 386 | 15.20 |
| DN150(6") | 390 | 15.35 |
| DN200(8") | 438 | 17.24 |
| DN250(10") | 535 | 21.06 |
| DN300(12") | 622 | 24.49 |

### Groove*Groove

**Dimensions Chart**

| Size | L(mm) | L(inch) |
|---|---|---|
| DN50(2") | 245 | 9.65 |
| DN65(2½") | 245 | 9.65 |
| DN80(3") | 245 | 9.65 |
| DN100(4") | 316 | 12.44 |
| DN125(5") | 386 | 15.20 |
| DN150(6") | 390 | 15.35 |
| DN200(8") | 438 | 17.24 |
| DN250(10") | 535 | 21.06 |
| DN300(12") | 622 | 24.49 |