ISO9001 CE API 6D

WESDOM

WESDOM GROUP

集团总部：中国・郑州华南城
分 工 厂：上海・天津・河北・山东・温州・连云港
驻外分公司：非洲・坦桑尼亚・赞比亚・肯尼亚

国际贸易部：+86-13203812911
国内贸易部：+86-13849013722

坦 桑 尼 亚：+255744222807
+255744222808

赞 比 亚：+260972377777
+260963767287

肯 尼 亚：+254780021428

www.wsdsolution.com
www.wsd-valve.com

Group headquarters: Zhengzhou South City, China
Branch Factory: Shanghai, Tianjin, Hebei, Shandong, Wenzhou, Lianyungang
Branch Company in Overseas: Tanzania, Zambia, Kenya in Africa

International Trading Department: +86-013203812911
Inland Trading Department: +86-013849013722

P.O Box 3922,mikocheni B, Dar Es Salaam, Tanzania Weisidunvalve2015@gmail.com

Mungwi Road(adjacent to check point), Lusaka, Zambia

Nairobi, Kenya Weisidunvalve@gmail.com

info@wsdvalve.com
weisidun@hawsd.com

WESDOM

WESDOM API Valve

WESDOM GROUP

WESDOM GROUP
Enterprise Social Responsibility

WESDOM are not only concerned about products, services and solutions.

WESDOM promise to implement sustainable development and benefit society with energy-saving and environmental protection.

Our Purpose: People-Oriented, Hard Work, Never Forget the Original Intention; Innovation and Forge Ahead.

Our Mission: To be a high-quality supplier of fluid control systems and plan maker; To contribute our wisdom and strength to the development of the cutting-edge technology of fluid control systems.

Our Vision: Explore the internal innovation spirit and creativity, pursuit, innovation and continuous improvement. Use wisdom, foresight and hard work to make "WESDOM" a world-renowned brand; Make the group company grow into a respectable "Four Satisfaction" enterprise:

Customer Satisfaction: Use high-quality products and refined services to add value to customers;

Employee Satisfaction: People-oriented, build a platform for all employees to realize their dreams, everyone is the CEO;

Partner Satisfaction: Mutual promotion, improvement, mutual benefit and win-win;

Shareholder Satisfaction: Enable the company to develop and grow, and return profits.

Our Values: Create differentiated value-added services for customers, let everyone in the company has a sense of accomplishment.

Company Introduction

WESDOM Group specializes in pipeline fluid systems: R&D, production and sales of valves, pipe fittings, water meters, flow meters, etc. The products cover cast iron, cast steel, stainless steel, copper, plastics and other materials, which are widely used in hydropower stations, heat, buildings, water supply and drainage, petroleum, chemical industry, electric power, medical and other fields.

In recent years, WESDOM Group has actively embraced the era of Internet of Everything, committed to IOT terminal control and artificial intelligence design, big data mining and development, and promoted smart hardware to move towards big data center and wisdom with excellent market foresight and technological innovation. The smart cities, smart heating, smart water and other fields are in progress.

In the early stage, the Internet of Things smart valves and smart water meters were developed to promote and apply smart control systems such as municipal heating and municipal water supply.

In terms of quality control, we have strict control procedures. From the raw materials entering the factory to the final product leaving the factory, after 24 quality inspection passes, each pass must ensure that the product quality is 100% qualified before it can flow into the next process, thus ensuring that the qualified rate of the finished products. WESDOM products can well meet the Chinese standard like GB, JB, HB; American standard like API, ASME, AWWA; British and EU standards like BS, EN, ISO; German standard DIN; Japanese standard JIS; Russian standard GOST and other standards.

WESDOM GROUP
Development History

2010
WESDOM was established

In December 2010, WESDOM was registered with a registered capital of 5 million yuan;

2015
WESDOM established the first overseas branch

June 2013, WESDOM passed ISO and other international certifications;

In June 2014, TIANJIN WESDOM VALVE MANUFACTURING CO.,LTD. was established in Tianjin, where the production of butterfly valves is concentrated;

2016
WESDOM products are exported to overseas regions and markets

In July 2015, the first overseas branch company WEISIDUN MATERIAL SOLUTION COMPANY was established in the beautiful African continent –Tanzania, and WESDOM began to expand into the international market;

In December 2015, WESDOM established a special foreign trade import and export company in Zhengzhou, the hinterland of the Central Plains HENAN WEISIDUN IMPORT AND EXPORT TRADE CO.,LTD.,to make up for the domestic shortcomings of entering the international market;

In 2016, WESDOM brand products have been exported to Tanzania, Zambia, Egypt, Turkey, Pakistan, Thailand, Indonesia, Vietnam, the Philippines, Saudi Arabia, Mexico and other countries and regions;

In 2017, the company carried out production, procurement adjustments and layouts, expanded product series, initially formed a production and procurement system for water series products (control and connection systems), and established a procurement system for major production clusters across the south and north. ;

2018
Zambia branch was established, and the group company expanded its measurement products series

In January 2018, the second exclusive import and export company was established –HENAN WESDOM FLOW CONTROL CO.,LTD.In August of the same year, the second overseas branch company –WESDOM VALVES AND FITTINGS COMPANY LIMITED was established in Zambia, Africa;

2019
WESDOM launched a series of plastic materials

In 2018, the series of measurement products (water meters, flow meters) were expanded, and the supply chain system was further enriched and improved;

2020
WESDOM sales exceeded 100 million yuan

In 2019, a series of plastic material products were launched; the company's valves and pipe fittings passed the CE certification; WESDOM overall sales performance exceeded 90 million in the same year;

In 2020, under the influence of the unfavorable factors of the domestic and foreign epidemic situation, the company has achieved the goal of breaking 100 million yuan in addition to the continuous growth of sales.

2021
Kenya branch is established, WESDOM products occupy the African market

In April 2021, the Kenya branch WESDOM VALVES AND FITTINGS(K) CO LIMITED was established and operated well, its products occupy the African market successfully.

To be continued...

……

WESDOM GROUP

Qualification Certificate

Product Quality Control Process

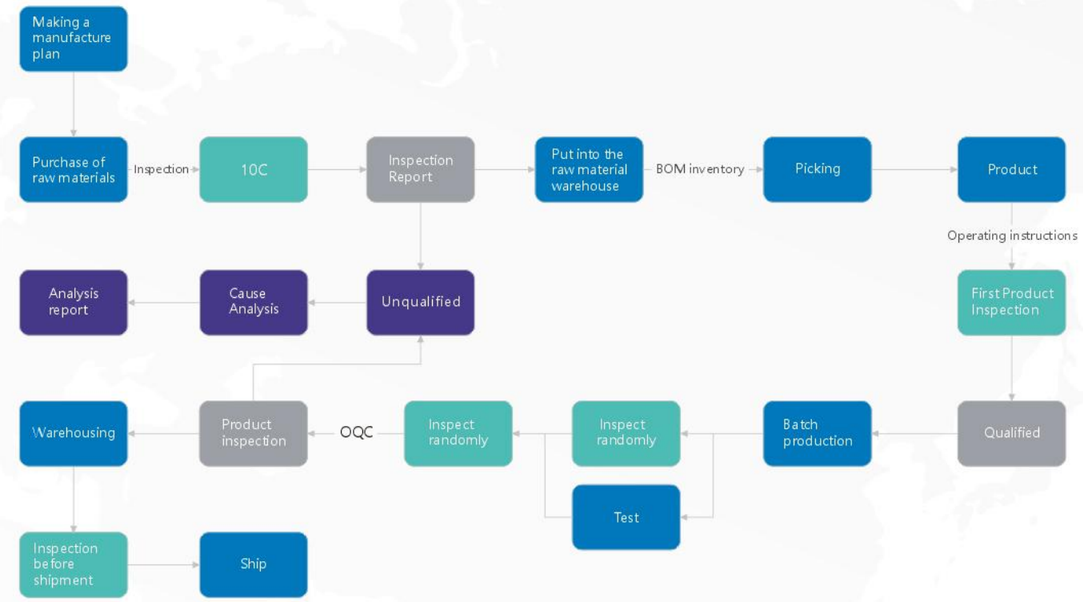

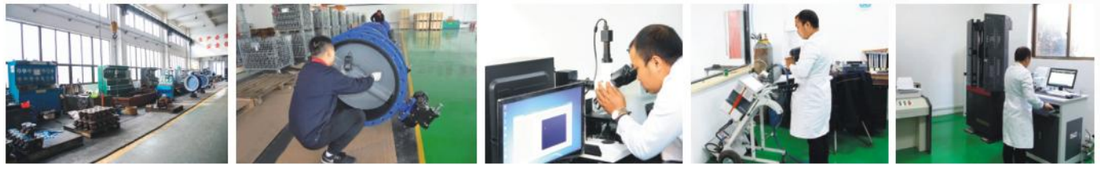

WESDOM GROUP
Application Field

Power Generation

- Water and electricity
- Flue gas desulfurization system
- Flue gas desulfurization system
- Cooling water system
- Steam System
- Waste incineration power generation
- Renewable energy

Steel

Water engineering valves and air valves are used to control the gases in the steel production

Mining

- Acid leaching solvent extraction
- Mud transmission
- Cooling System

Chemical Industry

- Chemical production
- Distribution system
- Surface treatment
- Biofuels

Boats and Ships

- Cargo loading
- Dredging system
- Cooling water system
- Inert gas
- Hull valve
- Ballast system
- Compressed gas

Building

- Water supply and drainage
- Heating ventilation and air conditioning

Contents

Gate Valve Series

Class 150 Bolted bonnet, outside screw & yoke, rising stem, flexible wedge 01
Class 300 Bolted bonnet, outside screw & yoke, rising stem, flexible wedge 02
Class 600 Bolted bonnet, outside screw & yoke, rising stem, flexible wedge 03
Class 900/1500/2500 Bolted bonnet, outside screw & yoke, rising stem, flexible wedge 04
Class 900/1500/2500 Pressure seal bonnet gate valve 05
Class 150/300/600 Forged steel flanged gate valve 06
Class 800 Forged steel NPT, socket weld gate valve 07
Class 900/1500/2500 Forged steel gate valve 08

Globe Valve Series

Class 150 Bolted bonnet, outside screw & yoke, rising stem, plug type disc 09
Class 300 Bolted bonnet, outside screw & yoke, rising stem, plug type disc 10
Class 600 Bolted bonnet, outside screw & yoke, rising stem, plug type disc 11
Class 900/1500/2500 Bolted bonnet, outside screw & yoke, rising stem, plug type disc 12
Class 900/1500/2500 Pressure seal, bonnet, piston type disc 13
Class 150/300/600 Forged steel flanged globe valve 15
Class 800 Forged steel NPT, socket weld globe valve 16
Class 900/1500/2500 Forged steel globe valve 17
DIN globe valve 18
DIN Bellows seal globe valve 20

Check Valve Series

Class 150 Bolted cover, swing type disc 22
Class 300 Bolted cover, swing type disc 23
Class 600 Bolted cover, swing type disc 24
Class 900/1500/2500 Bolted cover, swing type disc 25
Class 900/1500/2500 Pressure seal cover, swing type disc 26
Class 150/300/600 Forged steel swing check valve 27
Class 800 Forged steel swing check valve 28
Class 150/300/600 Forged steel flanged lifting check valve 29
Class 800 Forged steel lifting check valve 30
Class 150~300 Wafer type single-disc swing check valve 31
Wafer type dual plate check valve 32

Ball Valve Series

Class 150/300 Two-piece, split body, side entry design 35
Class 600~900 Two-piece, split body, side entry design 36
Trunnion mounting ball valve 37
Two-piece, split body, cast steel, side entry design 39
Class 150/300 Two-piece, split body, cast steel, side entry design 40
Class 600/900 Two-piece, split body, cast steel, side entry design 41
Three-piece, split body, forged steel, side entry design 42
Class 150 Three-piece, split body, forged steel, side entry design 44
Class 300/600 Three-piece, split body, forged steel, side entry design 45
Class 900/1500/2500 Three-piece, split body, forged steel, side entry design 46
3PC Forged steel compact body ball valve 47
Class 800/1500 3PC Forged steel compact body ball valve 48

Butterfly Valve Series

Triple eccentric, metal seat butterfly valve 49
Class 150 Triple eccentric, metal to metal seat, wafer or flanged ends 50
Class 300 Triple eccentric, metal to metal seat, wafer or flanged ends 51
Class 600 Triple eccentric, metal to metal seat, wafer or flanged ends 52
Class 900 Triple eccentric, metal to metal seat, wafer or flanged ends 53

Carbon Steel Pipe Fittings 54
Flange 57
Seamless Steel Tube 77

WESDOM

www.wsdsolution.com
www.wsd-valve.com

Gate Valve Series

WESDOM GROUP

Class 150 Bolted bonnet, outside screw & yoke, rising stem, flexible wedge

Features

Design and manufacture: API 600, API 603, JIS B2073, B2083
Face–to–Face dimension: 36" and smaller to ASME B16.10.
40"and larger to manufacturer's standard
Flanged End: 24" and smaller to ASME B16.5
26"and larger to ASME B16.47 series A & B
B.W. End: ASME B16.25
Shell Wall Thickness: API 600, ASME B16.34, API 603
26" and larger to manufacturer's standard
8" and smaller valves have a one–piece bonnet and yoke design
10" and larger valves have a split bonnet and yoke design.

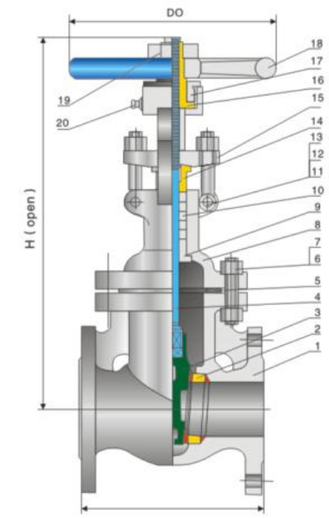

Main Parts and Materials

No	Parts	Material
1	Body	ASTM A216 Gr.WCB
2	Seat ring	ASTM A 105+13Cr
3	Wedge	ASTM A216 Gr.WCB+13Cr
4	Stem	ASTM A182 F6a
5	Gasket	304S.S.Jacketed Graphite
6	Stud	ASTM A193 Gr.B7
7	Nut	ASTM A 194 Gr,2H
8	Bonnet	ASTM A216 Gr,WCB
9	Backseat	ASTM A276 410
10	Packing	Graphite
11	Pin	C.S.
12	Gland bolt	ASTM A 193 Gr.B7
13	Gland nut	ASTM A194 Gr.2H
14	Bushing	ASTM A276 410
15	Gland	ASTM A216 Gr.WCB
16	Stem nut	Aluminum Bronze
17	Retaining nut	C.S
18	Handwheel	Malleable Iron
19	H.W. lock nut	C.S.
20	Lubricator	Assembly

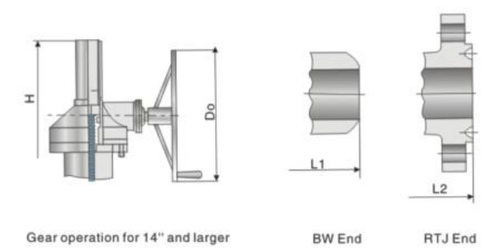

Note: Available LCB, LCC, WC6, C5, WC9, C12, CF8, CF8M,4A, 5A etc for body material. And trim can be customized upon request.

Main Dimensions and Weights

Valve Size	in.	1–1/2	2	2–1/2	3	4	5	6	8	10	12	14	16	18	20	24	28	30	32	36	40	42	48
	mm	40	50	65	80	100	125	150	200	250	300	350	400	450	500	600	700	750	800	900	1000	1050	1200
L(RF)	in.	6.5	7	7.5	8	9	10	10.5	11.5	13	14	15	16	17	18	20	24	24	26	28	30	31	34
	mm	165	178	190	203	229	254	267	292	330	356	381	406	432	457	508	610	610	660	711	762	787	864
L1 (BW)	in.	6.5	8.5	9.5	11.13	12	15	15.88	16.5	18	19.75	22.5	24	26	28	32	36	36	38	40	42	43	46
	mm	165	216	241	282	305	381	403	419	457	502	572	610	660	711	813	914	914	965	1016	1067	1092	1168
L2 (RTJ)	in.	7.0	7.5	8	8.5	9.5	10.5	11	12	13.5	14.5	15.5	16.5	17.5	18.5	20.5	24.5	24.5	26.5	28.5	—	—	—
	mm	178	191	203	216	242	267	280	305	343	369	394	419	445	470	521	623	622	673	724	—	—	—
H (open)	in.	15.7	16.13	18.56	20.94	24.13	27.94	31.75	39	46.69	55.31	63.56	71.31	78.19	87	106.25	119.31	130.56	137.25	150.56	183.86	193.75	217.5
	mm	392	409	472	532	612	710	806	990	1186	1405	1615	1811	1986	2210	2698	3030	3317	3487	3825	4670	4920	5525
Do	in.	7.86	7.86	7.86	9.86	9.86	11.81	11.81	13.75	17.69	19.69	18.13	18.13	18.13	24	24	24	24	24	30	30	30	30
	mm	200	200	200	250	250	300	300	350	450	500	460	460	460	610	610	610	610	610	760	760	760	760
WT (kg)	RF	18.5	20	30	36	53	71	85	136	220	323	387	553	660	810	1250	1931	2380	2490	3600	4815	5300	7110
	BW	15.5	17	26	29	46	66	77	116	202	294	350	506	575	720	1130	1765	2028	2280	3080	4840	5275	7050

Class 300 Bolted bonnet, outside screw & yoke, rising stem, flexible wedge

Features

Design and manufacture: API 600, API 603, JIS B2073, B2083.
Face–to–Face dimension: 36"and smaller to ASME B16.10.
40"and larger to manufacturer"s standard
Flanged End: 24"and smaller to ASME B16.5
26"and larger to ASME B16.47 series A & B
B.W. End: ASME B16.25
Shell Wall Thickness: API 600, ASME B16.34, API 603
26" and larger to manufacturer's standard
8" and smaller valves have a one–piece bonnet and yoke design
10" and larger valves have a split bonnet and yoke design.

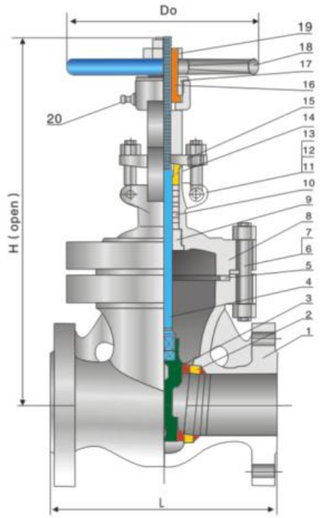

Main Parts and Materials

No	Parts	Material
1	Body	ASTM A216 Gr.WCB
2	Seat ring	ASTM A 105+13Cr
3	Wedge	ASTM A216 Gr.WCB+13Cr
4	Stem	ASTM A182 F6a
5	Gasket	304S.S.Jacketed Graphite
6	Stud	ASTM A193 Gr.B7
7	Nut	ASTM A 194 Gr,2H
8	Bonnet	ASTM A216 Gr WCB
9	Backseat	ASTM A276 410
10	Packing	Graphite
11	Pin	C.S.
12	Gland bolt	ASTM A 193 Gr.B7
13	Gland nut	ASTM A194 Gr.2H
14	Bushing	ASTM A276 410
15	Gland	ASTM A216 Gr.WCB
16	Stem nut	Aluminum Bronze
17	Retaining nut	C.S
18	Handwheel	Malleable Iron
19	H.W. lock nut	C.S.
20	Lubricator	Assembly

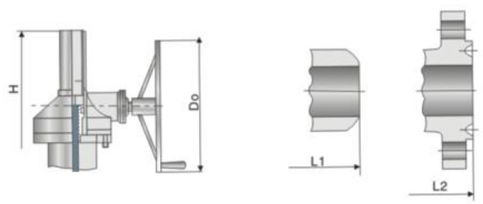

Gear operation for 12" and larger BW End RTJ End

Note: Available LCB, LCC, WC6, C5, WC9, C12, CF8, CF8M,4A, 5A etc for body material. And trim can be customized upon request.

Main Dimensions and Weights

Valve Size	in. / mm	1–1/2 / 40	2 / 50	2–1/2 / 65	3 / 80	4 / 100	5 / 125	6 / 150	8 / 200	10 / 250	12 / 300	14 / 350	16 / 400	18 / 450	20 / 500	24 / 600	28 / 700	30 / 750	32 / 800	36 / 900	40 / 1000	42 / 1050	48 / 1200
L–L1	in.	7.5	8.5	9.5	11.12	12	15	15.88	16.5	18	19.75	30	33	36	39	45	54	55	61.12	68	76	78	88
	mm	190	216	241	282	305	381	403	419	457	502	762	838	914	991	1143	1346	1397	1524	1727	1930	1981	2235
L2 (RTJ)	in.	8.0	9.12	10.12	11.74	12.62	15.62	16.5	17.12	18.62	20.27	30.62	33.62	36.62	39.75	45.88	54	56	61.12	69.12	—	—	—
	mm	203	232	257	298	321	397	419	435	473	518	778	854	930	1010	1165	1371	1422	1581	1755	—	—	—
H (open)	in.	14.7	15.75	18.75	21.38	25.63	30.31	34.63	40.81	50.19	56.63	65	72.44	79.94	88.19	114.19	122	139.38	152	169.75	188.63	198.13	217.38
	mm	374	400	477	543	650	770	880	1037	1275	1438	1650	1840	2030	2240	2900	3100	3540	3860	4312	4791	5032	5522
Do	in.	7.88	7.88	9.88	9.88	11.81	11.81	13.75	17.69	19.69	18.13	18.13	18.13	24	24	24	24	30	30	30	24	24	24
	mm	200	200	250	250	300	300	350	450	500	460	460	460	610	610	610	610	760	760	760	610	610	610
WT (kg)	RF	26	30	39	55	83	92	137	240	333	536	699	1010	1205	1720	2800	3150	3786	4210	6850	8460	9500	12400
	BW	22	26	34	47	68	77	118	195	271	432	595	848	1025	1460	2294	2870	3220	3675	4990	6160	6800	9000

Class 600 Bolted bonnet, outside screw & yoke, rising stem, flexible wedge

Features

Design and manufacture: API 600, API 603, JIS B2073, B2083.
Face–to–Face dimension:36" and smaller to ASME B16.10.
40" and larger to manufacturer's standard
Flanged End: 24" and smaller to ASME B16.5
26" and larger to ASME B16.47 series A & B
B.W.End; ASME B 16.25
Shell Wall Thickness: API 600, ASME B16.34, API 603
26" and larger to manufacturer's standard
6" and smaller valves have a one–piece bonnet and yoke design
8" and larger valves have a split bonnet and yoke design.

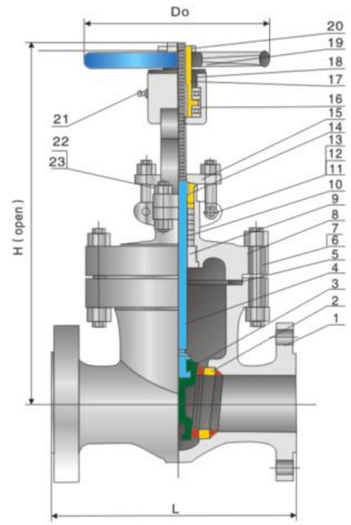

Main Parts and Materials

No	Parts	Material
1	Body	ASTM A216 Gr.WCB
2	Seat ring	ASTM A 105+13Cr
3	Wedge	ASTM A216 Gr.WCB+13Cr
4	Stem	ASTM A182 F6a
5	Gasket	304S.S.Jacketed Graphite
6	Stud	ASTM A193 Gr.B7
7	Nut	ASTM A 194 Gr.2H
8	Bonnet	ASTM A216 Gr.WCB
9	Backseat	ASTM A276 410
10	Packing	Graphite
11	Pin	C.S.
12	Eyebolt	ASTM A 193 Gr.B7
13	Hex. nut	ASTM A194 Gr.2H
14	Gland	ASTM A276 410
15	Gland flange	ASTM A216 Gr.WCB
16	Bearing	Assembly
17	Stem nut	Aluminum Bronze
18	Retaining nut	C.S
19	Handwheel	Malleable Iron
20	H.W. lock nut	C.S.
21	Lubricator	Assembly
22	Yoke bolt	ASTM A 193 Gr.B7
23	Yoke nut	ASTM A 194 Gr.2H

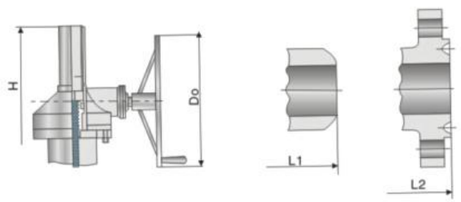

Gear operation for 10" and larger BW End RTJ End

Note: Available LCB, LCC, WC6, C5, WC9, C12, CF8, CF8M,4A, 5A etc for body material. And trim can be customized upon request.

Main Dimensions and Weights

Valve Size	in. / mm	2 / 50	2–1/2 / 65	3 / 80	4 / 100	5 / 125	6 / 150	8 / 200	10 / 250	12 / 300	14 / 350	16 / 400	18 / 450	20 / 500	24 / 600	26 / 650	28 / 700	30 / 750	32 / 800	36 / 900
L-L1 (RF-BW)	in.	11.5	13	14	17	20	22	26	31	33	35	39	43	47	55	57	61	65	70	82
	mm	292	330	356	432	508	559	660	787	838	889	991	1092	1194	1397	1448	1549	1651	1778	2083
L2 (RTJ)	in.	11.62	13.12	14.12	17.12	20.12	22.12	26.12	31.12	33.12	35.12	39.12	43.12	47.25	55.38	—	—	—	—	—
	mm	295	333	359	435	511	562	663	790	841	892	994	1095	1200	1407					
H (open)	in.	18.63	21.75	23.38	28.06	30.3	38.19	44.19	52.38	59./81	68.13	72.75	90.13	98.81	119	127.25	140.25	152.75	163	179.5
	mm	474	553	593	713	770	970	1122	1330	1519	1730	1835	2290	2510	3022	3232	2562	3880	4140	4560
Do	in.	9.88	9.88	11.81	13.75	15.7	19.69	22.06	18.13	18.13	24	24	24	30	30	30	30	24	24	24
	mm	250	250	300	350	400	500	560	460	460	610	610	610	760	760	760	760	610	610	610
WT (kg)	RF	41	58	88	131	205	253	413	623	784	1288	1820	2150	2540	4080	5220	6050	6945	7965	10000
	BW	35	50	68	104	192	208	328	496	637	1120	1448	1828	2201	3360	4295	4980	5710	5223	8220

Class 900/1500/2500 Bolted bonnet, outside screw & yoke, rising stem, flexible wedge

Features

Design and manufacture: API 600, API 603, JIS B2073, B2083.
Face–to–Face dimension: 36"and smaller to ASME B16.10.
40"and larger to manufacturer's standard
Flanged End: 24" and smaller to ASME B16.5
26" and larger to ASME B16.47 series A
B.W. End: ASME B16.25
Shell Wall Thickness: API 600, ASME B16.34, API 603
26" and larger to manufacturer's standard
6" and smaller valves have a one–piece bonnet and yoke design
8" and larger valves have a split bonnet and yoke design.

Main Parts and Materials

No	Parts	Material
1	Body	ASTM A216 Gr.WCB
2	Seat ring	ASTM A 105+STL
3	Wedge	ASTM A216 Gr.WCB+13Cr
4	Stem	ASTM A182 F6a
5	Gasket	Soft Iron
6	Stud	ASTM A 193 Gr.B7
7	Nut	ASTM A194 Gr.2H
8	Bonnet	ASTM A216 Gr WCB
9	Backseat	ASTM A276 410
10	Packing	Graphite
11	Pin	C.S.
12	Eyebolt	ASTM A 193 Gr.B7
13	Hex. nut	ASTM A194 Gr.2H
14	Gland	ASTM A276 410
15	Gland flange	ASTM A216 Gr.WCB
16	Bearing	Assembly
17	Stem nut	Aluminum Bronze
18	Retaining nut	C.S
19	Handwheel	Malleable Iron
20	H.W. lock nut	C.S.
21	Lubricator	Assembly
22	Yoke bolt	ASTM A 193 Gr.B7
23	Yoke nut	ASTM A 194 Gr.2H

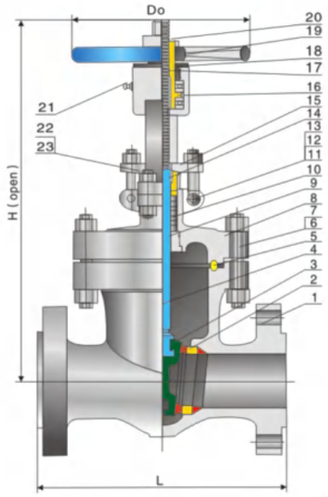

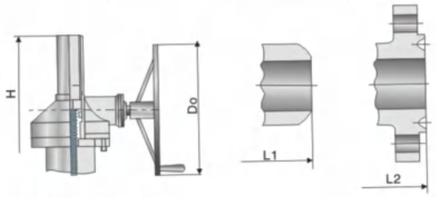

Class 900≥6" and larger
Class 1500≥4" and larger
Class 2500≥3" and larger

BW End

RTJ End

Note: Available LCB, LCC, WC6, C5, WC9, C12, CF8, CF8M,4A, 5A etc for body material. And trim can be customized upon request.

Main Dimensions and Weights

	Valve Size	in. mm	2 50	2–1/2 65	3 80	4 100	6 150	8 200	10 250	12 300
Class 900	L–L1 (RF–BW)	in. mm	14.5 368	16.5 419	15 381	18 457	24 610	29 737	33 838	38 965
	L2 (RTJ)	in. mm	14.62 371	16.62 422	15.12 384	18.12 460	24.12 613	29.12 740	33.12 841	38.12 968
	H (open)	in. mm	21.56 547	27.56 700	28.15 715	28.69 729	41 1041	49.63 1260	62.63 1590	70.69 1795
	D0	in. mm	11.81 300	14 355	15.75 400	17.69 450	22.06 560	24 610	24 610	24 610
	WT (kg)	RF BW	90 82	110 93	123 108	148 122	420 359	650 566	1160 980	1700 1450
Class 1500	L–L1 (RF–BW)	in. mm	14.5 368	16.5 419	18.5 470	21.5 546	27.75 705	32.75 832	39 991	44.5 1130
	L2 (RTJ)	in. mm	14.62 371	16.62 422	18.62 473	21.62 549	28 711	33.13 842	39.38 1001	45.12 1146
	H (open)	in. mm	22.63 574	27.56 700	31.75 806	34.94 887	42.5 1079	53.94 1370	59.81 1520	65 1651
	D0	in. mm	13.75 350	15.75 400	17.75 450	22.06 560	24 610	24 610	30 760	30 760
	WT (kg)	RF BW	117 93	175 144	240 185	337 385	680 584	1228 978	2278 1990	3260 2850
Class 2500	L–L1 (RF–BW)	in. mm	17.75 451	20 508	22.75 578	26.5 673	36 914	40.25 1022	50 1270	—
	L2 (RTJ)	in. mm	17.87 454	20.25 514	23 584	26.88 683	36.5 927	40.87 1038	50.88 1292	—
	H (open)	in. mm	27.56 700	29.5 750	34.63 887	42.5 1079	53.94 1370	60.25 1530	80.5 2045	—
	Do	in. mm	13.75 350	17.75 450	22.06 560	28.38 720	18.13 460	24 610	30 760	—
	WT (kg)	RF BW	132 99	206 155	256 192	498 390	1550 1230	2395 1980	4460 3700	—

Class 900/1500/2500 Pressure seal bonnet gate valve

Features

Design and manufacture: API 600 and ASME B16.34.
Face–to–Face dimension: ASME B16.10.
Flanged dimension: ASME B16.5.
B.W. End: ASME B16.25
Shell Wall Thickness: API 600, ASME B16.34
Inspection & Test: API 598

Main Parts and Materials

No	Parts	Material
1	Body	ASTM A216 Gr.WCB
2	Seat ring	ASTM A 105+STL
3	Wedge	ASTM A216 Gr.WCB+13Cr
4	Stem	ASTM A182 F6a
5	Bonnet	ASTM A216 Gr.WCB
6	Sealing ring	ASTM A182 F304
7	Spacer ring	ASTM A182 F6a
8	Segment ring	ASTM A182 F6a
9	Supporting plate	ASTM A105
10	Stud	ASTM A193 Gr.B7
11	Nut	ASTM A 194 Gr.2H
12	Packing seat	ASTM A276 410
13	Lifting jack	ASTM A216 Gr.WCB
14	Gland flange	ASTM A216 Gr.WCB
15	Eyebolt	ASTM A193 Gr.B7
16	Hex. nut	ASTM A 194 Gr.2H
17	Bolt	C.S
18	Stem nut	Aluminum Bronze
19	Gear box	Assembly
20	Yoke	ASTM A 216 Gr.WCB
21	Gland	ASTM A276 410
22	Packing	Graphite
23	Bolt	ASTM A 193 Gr B7
24	Nut	ASTM A 194 Gr 2H

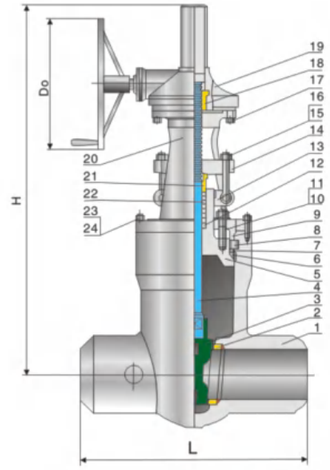

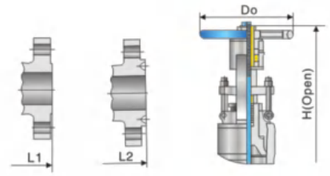

RF End

RTJ End

For 4" and smaller

Note: Available LCB, LCC, WC6, C5, WC9, C12, CF8, CF8M,4A, 5A etc for body material. And trim can be customized upon request.

Main Dimensions and Weights

	Valve Size	in. mm	2 50	2–1/2 65	3 80	4 100	6 150	8 200	10 250	12 300	14 350	16 400
Class 900	BW(L)	in. mm	8.5 216	10 254	12 305	13.98 356	20 508	26 660	31 787	36 914	39 991	43 1092
	RF(L1)	in. mm	14.5 368	16.5 419	15 381	18 457	24 610	29 737	33 838	38 965	40.5 1029	44.5 1130
	RTJ(L2)	in. mm	14.62 371	16.62 422	15.12 384	18.12 460	24.12 613	29.12 740	33.12 841	38.12 968	40.88 1039	44.88 1140
	Open(H)	in. mm	21.81 554	25.08 637	26.77 680	31,34 796	42.68 1084	54.02 1372	58.82 1494	61.02 1550	77.17 1960	87 2210
	Do	in. mm	11.81 300	13.78 350	13.78 350	15.75 400	22.05 560	18.11 460	24 610	24 610	24 610	30 760
	WT(kg)	RF BW	48 37	82 62	90 80	152 118	339 364	620 522	948 758	1293 1088	1718 1448	2378 2016
Class 1500	BW(L)	in. mm	8.5 216	10 254	12 305	16 406	22 559	28 711	34 864	39 991	42 1067	47 1194
	RF(L1)	in. mm	14.5 368	16.5 419	18.5 470	21.5 546	27.75 705	32.75 832	39 991	44.5 1130	49.5 1257	54.5 1384
	RTJ(L2)	in. mm	14.62 371	16.62 422	18.62 473	21.62 549	28 711	33.13 842	39.38 1001	45.12 1146	50.25 1276	55.38 1407
	Open(H)	in. mm	21.81 554	25.08 637	30.2 767	34.45 875	43.07 1094	54 1372	65.16 1655	72.20 1834	84.65 2150	88.98 2260
	Do	in. mm	11.81 300	17.72 450	17.72 450	22.05 560	12 305	18.11 460	24 610	24 610	30 760	30 760
	WT(kg)	RF BW	58 44	89 69	126 83	180 128	392 290	793 585	1368 972	2118 1613	2798 2008	3868 2813
Clase 2500	BW(L)	in. mm	11 279	13 330	14.5 368	18 457	24 610	30 762	36 914	41 1041	—	—
	RF(L1)	in. mm	17.75 451	20 508	22.75 578	26.50 673	36 914	40.25 1022	50 1270	56 1422	—	—
	RTJ(L2)	in. mm	17.87 454	20.25 514	23 584	26.88 683	36.50 927	40.87 1038	50.88 1292	56.88 1445	—	—
	Open(H)	in. mm	24 610	25.75 654	29.65 753	33.46 850	49.37 1254	54.09 1374	66.34 1685	74 1873	—	—
	Do	in. mm	19.69 500	19.69 500	23.62 600	23.62 600	18.11 460	18.11 460	24 610	24 610	—	—
	WT(kg)	RF BW	119 86	173 133	193 142	227 156	718 498	1293 890	2248 1548	3091 2330	—	—

Class 150/300/600 Forged steel flanged gate valve

Technical Specification

1、Design and manufacture: API 602, BS 5352.
2、Consturction feature: B.B OS&Y or WB OS&Y
3、Face to face dimensions: ANSI B 16.10.
4、Flanged connection: ANSI B 16.5.
5、Test and inspection: API 598.
6、Available LF2, F5, F9, F11, F22, F304(L), F316(L), aluminium bronze, inconel, monel etc for body material. And trim can be customized upon request.

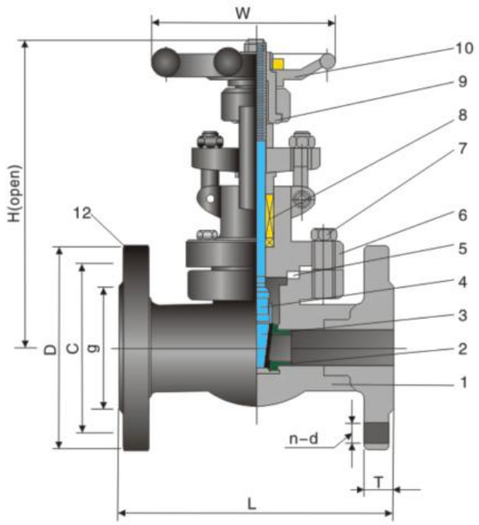

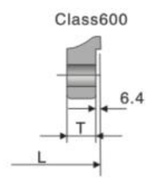

Main Parts and Materials

No	Parts	Material
1	Body	A105
2	Seat	13Cr
3	Wedge	13Cr
4	Stem	A182-F6a
5	Gasket	304S.S. Jacketed Graphite
6	Bonnet	A105
7	Bolt	A193-B7
8	Packing	Graphite
9	Stem nut	13Cr
10	Handwheel	Malleable Iron
11	Flange	A105

Main Dimensions and Weights

DN		Class	L	D	C	g	T	n-d	H(Open)		W		WT(kg)	
inch	mm								Reduced Bore	Full Bore	Reduced Bore	Full Bore	Reduced Bore	Full Bore
1/2"	15	150	108	90	60.3	35	11.5	4-16	166	169	100	100	4.5	5
		300	140	95	66.5		14.5	4-16					4.8	5.2
		600	165	95	66.5		14.5	4-16					5.9	5.9
3/4"	20	150	117	100	70	43	13	4-16	169	193	100	125	5.2	6.1
		300	152	115	82.5		16	4-19					6.2	6.3
		600	190	115	82.5		16	4-19					7.4	7.5
1"	25	150	127	110	79.5	51	14.5	4-16	193	230	125	160	8.2	8.4
		300	165	125	89		18	4-19					9.3	8.6
		600	216	125	89		18	4-19					10.4	10.2
1¼"	32	150	140	115	89	63	16	4-16	230	246	160	160	11.5	14.3
		300	178	135	98.5		19.5	4-19					14	14.5
		600	229	135	98.5		21	4-19					16.2	16.7
1½"	40	150	165	125	98.5	73	18	4-16	246	283	160	180	12.5	15.4
		300	190	155	114.5		21	4-22.5					15.5	15.6
		600	241	155	114.5		22.5	4-22.5					17.5	17.4
2"	50	150	178	150	120.5	92	19.5	4-19	283	330	180	200	20.3	22.7
		300	216	165	127		22.5	8-19					23.4	22.8
		600	292	165	127		26	8-19					28.3	28.7

Class 800 Forged steel NPT, socket weld gate valve

Technical Specification

1、Design and manufacture: API 602, BS 5352.
2、Consturction feature: B.B OS&Y or WB OS&Y
3、FNPT connection: ANSI B1.20.1
Socket weld connection: ANSI B16.11
4、Test and inspection: API 598.
5、Available LF2, F5, F9, F11, F22, F304(L), F316(L), aluminium bronze, inconel, monel etc for body material. And trim can be customized upon request.

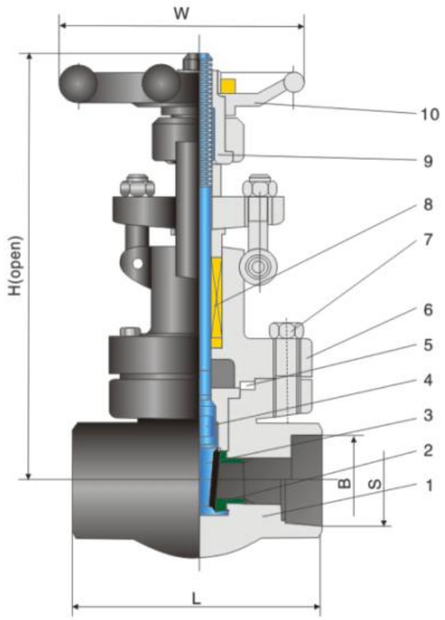

Main parts and materials

No	Parts	Material
1	Body	A105
2	Seat	13Cr
3	Wedge	13Cr
4	Stem	A182-F6a
5	Gasket	304S.S. Jacketed Graphite
6	Bonnet	A105
7	Bolt	A193-B7
8	Packing	Graphite
9	Stem nut	13Cr
10	Handwheel	Malleable Iron

Main Dimensions and Weights

DN		L	B(SW)		S(Screwed)			H(Open)	W	WT(kg)
inch	mm		ANSI	JIS	ANSI NPT600	ISO、BS RC560	JIS PT550			
1/2"	15	92	21.8	22.2	1/2"			169	100	2.2
3/4"	20	111	27.1	27.7	3/4"			193	125	4.3
1"	25	120	33.8	34.5	1"			230	160	5.9
1¼"	32	120	42.6	43.2	1¼"			246	160	6.9
1½"	40	140	48.7	49.1	1½"			283	180	11.1
2"	50	178	61.1	61.1	2"			330	200	15.2

Class 900/1500/2500 Forged steel gate valve

Technical Specification

1、Design and manufacture: API 602, BS 5352.
2、Consturction feature: PSB OS&Y or WB OS&Y
3、FNPT connection: ANSI B1.20.1
Socket weld connection: ANSI B16.11
4、Test and inspection: API 598.
5、Available LF2, F5, F9, F11, F22, F304(L), F316(L), aluminium bronze, inconel, monel etc for body material. And trim can be customized upon request.

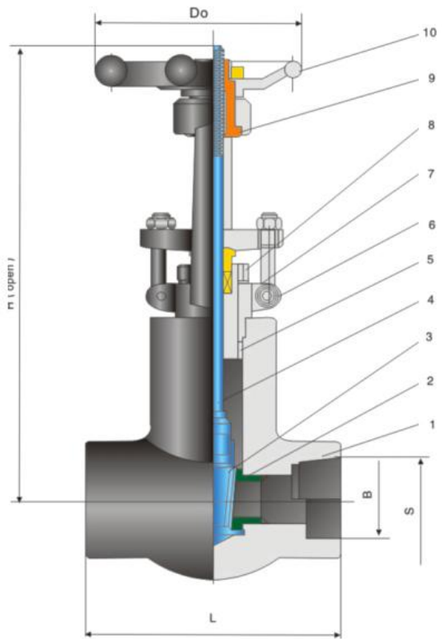

Main Parts and Materials

No	Parts	Material
1	Body	A105
2	Seat	13Cr
3	Wedge	13Cr
4	Stem	A182-F6a
5	Sealed ring	304
6	Yoke	A105
7	Bonnet	A105
8	Packing	Graphite
9	Stem nut	13Cr
10	Handwheel	Malleable Iron

Main Dimensions and Weights

DN		L		B(SW)		S(Screwed)			H(Open)	W	WT(kg)
inch	mm	Class 900 Cass 1500	Class 2500	ANSI	JIS	ANSI NPT600	ISO、BS RC560	JIS PT550			
1/2"	15	140	186	21.8	22.2	1/2"			321	125	12.3
3/4"	20	140	186	27.1	27.7	3/4"			321	125	11.6
1"	25	140	186	33.8	34.5	1"			321	160	10.8
1¼"	32	178	232	42.6	43.2	1¼"			380	160	26
1½"	40	178	232	48.7	49.1	1½"			414	180	28.4
2"	50	216	279	61.1	61.1	2"			502	200	60

Globe Valve Series

Class 150 Bolted bonnet, outside screw & yoke, rising stem, plug type disc

Features

Design and manufacture: BS 1873, ASME B16.34.
Face-to-Face dimension:ASME B16.10, JIS B2002.
Flanged End: ASME B16.5,JIS B2212, B2214.
B.W.End: ASME B16.25
Shell Wall Thickness: BS 1873, ASME B16.34
Inspection & Test: API 598

Main Parts and Materials

No	Parts	Material
1	Body	ASTM A216 Gr.WCB
2	Seat ring	ASTM A105+13Cr
3	Disc	ASTM A105+13Cr
4	Stem	ASTM A182 F6a
5	Gasket	304S.S.Jacketed Graphite
6	Bonnet	ASTM A216 Gr.WCB
7	Stud	ASTM A193 Gr.B7
8	Nut	ASTM A194 Gr.2H
9	Backseat	ASTM A276 410
10	Packing	Graphite
11	Gland bolt	ASTM A193 Gr.B7
12	Gland nut	ASTM A194 Gr.2H
13	Pin	C.S
14	Gland	ASTM A276 410
15	Gland flange	ASTM A216 Gr.WCB
16	Stem nut	Aluminum Bronze
17	Screw	C.S.
18	Handwheel	Malleable Iron
19	Washer	C.S.
20	Nut	C.S.
21	Disc cover	ASTM A276 410
22	Washer	S.S.

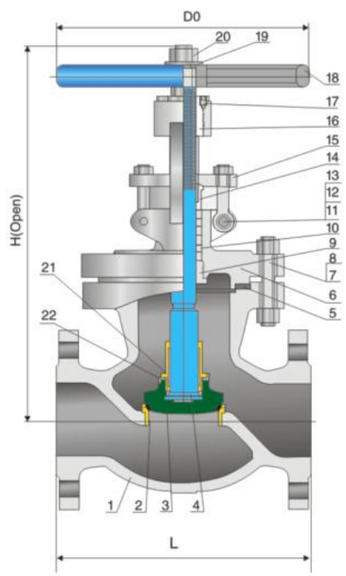

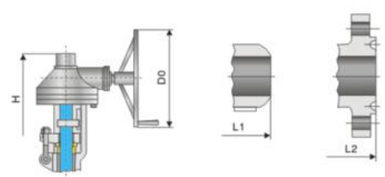

Gear operation for 14" and larger BW End RTJ End

Note: Available LCB, LCC, WC6, C5, WC9, C12, CF8, CF8M,4A, 5A etc for body material. And trim can be customized upon request.

Main Dimensions and Weights

Valve Size	in. mm	1-1/2 40	2 50	2-1/2 65	3 80	4 100	5 125	6 150	8 200	10 250	12 300	14 350	16 400
L-L1 (RF-BW)	in. mm	6.5 165	8 203	8.5 216	9.5 241	11.5 292	14 356	16 406	19.5 495	24.5 622	27.5 698	31 787	36 914
L2 (RTJ)	in. mm	7.0 178	8.5 216	9 229	10 254	12 305	14.5 369	16.5 419	20 508	25 635	28 711	31.5 800	36.5 927
H (open)	in. mm	14.25 326	14.69 373	15.38 390	16.56 421	20.25 515	21.19 538	22.31 567	24.63 626	28 712	39 990	51 1295	63.75 1619
Do	in. mm	7.88 200	7.88 200	9.88 250	9.88 250	11.81 300	11.81 300	13.75 350	15.75 400	17.75 450	20 500	24 610	24 610
WT (kg)	RF BW	19 16	22 19	29 25	42 34	64 49	77 65	105 82	154 131	288 249	507 430	690 600	950 850

Class 300 Bolted bonnet, outside screw & yoke, rising stem, plug type disc

Features

Design and manufacture: BS 1873, ASME B16.34.
Face-to-Face dimension: ASME B16.10, JIS B2002.
Flanged End: ASME B16.5, JIS B2212, B2214.
B.W.End: ASME B16.25
Shell Wall Thickness: BS 1873, ASME B16.34
Inspection & Test: API 598

Main Parts and Materials

No	Parts	Material
1	Body	ASTM A216 Gr.WCB
2	Seat ring	ASTM A105+13Cr
3	Disc	ASTM A105+13Cr
4	Stem	ASTM A182 F6a
5	Gasket	304S.S.Jacketed Graphite
6	Bonnet	ASTM A216 Gr.WCB
7	Stud	ASTM A193 Gr.B7
8	Nut	ASTM A194 Gr.2H
9	Backseat	ASTM A276 410
10	Packing	Graphite
11	Gland bolt	ASTM A193 Gr.B7
12	Gland nut	ASTM A194 Gr.2H
13	Pin	C.S
14	Gland	ASTM A276 410
15	Gland flange	ASTM A216 Gr.WCB
16	Stem nut	Aluminum Bronze
17	Screw	C.S.
18	Handwheel	Malleable Iron
19	Washer	C.S.
20	Nut	C.S.
21	Disc cover	ASTM A276 410
22	Washer	S.S.

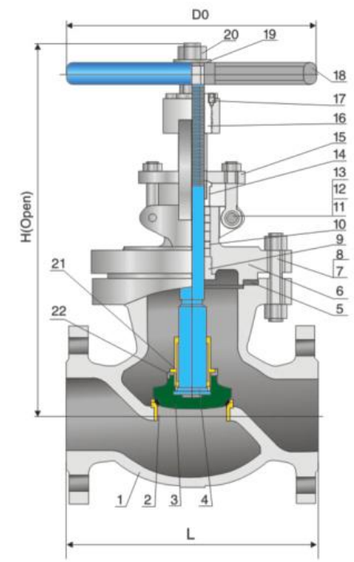

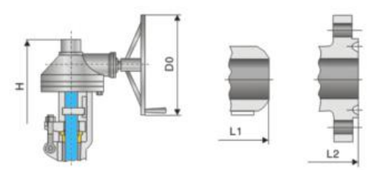

gear operation for 12" and larger BW End RTJ End

Note: Available LCB, LCC, WC6, C5, WC9, C12, CF8, CF8M,4A, 5A etc for body material. And trim can be customized upon request.

Main Dimensions and Weights

Valve Size	in. mm	1-1/2 40	2 50	2-1/2 65	3 80	4 100	5 125	6 150	8 200	10 250	12 300	14 350	16 400
L-L1 (RF-BW)	in. mm	9 229	10.5 267	11.5 292	12.5 318	14 356	15.75 400	17.5 444	22 559	24.5 622	28 711	33 838	34 864
L2 (RTJ)	in. mm	9.5 242	11.12 283	12.12 308	13.12 334	14.62 372	16.37 416	18.12 460	22.62 575	25.12 638	28.62 727	33.62 854	34.62 880
H (open)	in. mm	14.17 360	15.69 398	17.13 436	18.19 462	22.06 560	24.38 620	27.31 694	38.63 982	44.5 1130	41.31 1049	61.25 1556	67 1700
Do	in. mm	7.88 200	7.88 200	9.88 250	9.88 250	13.75 350	15.75 400	17.75 450	22.06 560	34 860	24 610	24 610	24 610
WT (kg)	RF BW	26 21	31 26	43 38	57 44	86 68	130 110	168 138	280 228	385 329	724 618	1500 1350	2200 2000

Class 600 Bolted bonnet, outside screw & yoke, rising stem, plug type disc

Technical Specification

Design and manufacture: BS 1873, ASME B16.34.
Face–to–Face dimension: ASME B16.10.
Flanged End: ASME B16.5.
B.W.End: ASME B16.25
Shell Wall Thickness: BS 1873, ASME B16.34
Inspection & Test: API 598

Main Parts and Materials

No	Parts	Material
1	Body	ASTM A216 Gr.WCB
2	Seat ring	ASTM A105+13Cr
3	Disc	ASTM A105+13Cr
4	Stem	ASTM A182 F6a
5	Gasket	304S.S.Jacketed Graphite
6	Bonnet	ASTM A216 Gr.WCB
7	Stud	ASTM A193 Gr.B7
8	Nut	ASTM A194 Gr.2H
9	Backseat	ASTM A276 410
10	Packing	Graphite
11	Gland bolt	ASTM A193 Gr.B7
12	Gland nut	ASTM A194 Gr.2H
13	Pin	C.S
14	Gland	ASTM A276 410
15	Gland flange	ASTM A216 Gr.WCB
16	Stem nut	Aluminum Bronze
17	Screw	C.S.
18	Handwheel	Malleable Iron
19	Washer	C.S.
20	Nut	C.S.
21	Disc cover	ASTM A276 410
22	Washer	S.S.

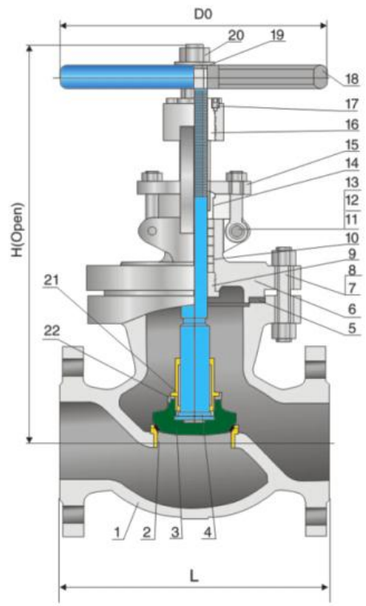

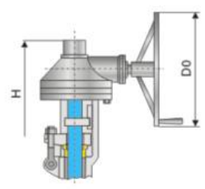

Gear operation for 8" and larger

BW End

RTJ End

Note: Available LCB, LCC, WC6, C5, WC9, C12, CF8, CF8M,4A, 5A etc for body material. And trim can be customized upon request.

Main Dimensions and Weights

Valve Size	in. mm	2 50	2–1/2 65	3 80	4 100	6 150	8 200	10 250	12 300	14 350	16 400
L–L1 (RF–BW)	in. mm	11.5 292	13 330	14 356	17 432	22 559	26 660	31 787	33 838	35 889	39 991
L2 (RTJ)	in. mm	11.62 295	13.12 333	14.12 359	17.12 435	22.12 562	26.12 663	31.12 790	33.12 841	35.12 892	39.12 994
H (open)	in. mm	16.75 425	19.75 502	20.5 521	24.38 620	34.88 886	36.69 932	41 1040	50.38 1280	70.88 1800	76 1930
Do	in. mm	9.88 250	11.81 300	13.75 350	17.75 450	28.38 720	18.13 460	24 610	30 760	30 760	30 760
WT (kg)	RF BW	39 33	58 48	73 61	120 95	327 261	482 385	700 588	900 795	2700 2510	3600 3350

Class 900/1500/2500 Bolted bonnet, outside screw & yoke, rising stem, plug type disc

Technical Specification

Design and manufacture: BS 1873, ASME B16.34.
Face–to–Face dimension: ASME B16.10.
Flanged End: ASME B16.5.
B.W.End: ASME B16.25
Shell Wall Thickness: BS 1873, ASME B16.34
Inspection & Test: API 598

Main Parts and Materials

No	Parts	Material
1	Body	ASTM A216 Gr.WCB
2	Seat ring	ASTM A105+STL
3	Disc	ASTM A105+13Cr
4	Stem	ASTM A182 F6a
5	Disc cover	ASTM A276 410
6	Stud	ASTM A193 Gr B7
7	Nut	ASTM A194 Gr.2H
8	Gasket	Soft Iron
9	Backseat	ASTM A276 410
10	Bonnet	ASTM A216 Gr.WCB
11	Packing	Graphite
12	Gland	ASTM A276 410
13	Gland flange	ASTM A216 Gr.WCB
14	Gland bolt	ASTM A193 Gr B7
15	Gland nut	ASTM A194 Gr.2H
16	Pin	C.S.
17	Bearing	Assembly
18	Lubricator	Assembly
19	Stem nut	Aluminum Bronze
20	Hand wheel	Malleable Iron
21	H.W.lock nut	C.S.
22	Screw	C.S.
23	Retaining nut	C.S.
24	Bolt	C.S.
25	Guide block	C.S.

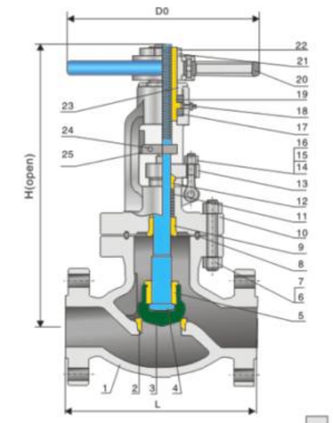

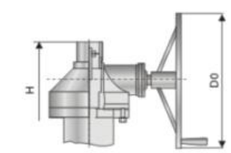

Gear operation for
Class 900≥6" and larger
Class 1500≥4" and larger
Class 2500≥3" and larger

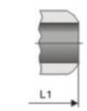

BW End

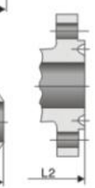

RTJ End

Note: Available LCB, LCC, WC6, C5, WC9, C12, CF8, CF8M,4A, 5A etc for body material. And trim can be customized upon request.

Main Dimensions and Weights

	ValveSize	in. mm	2 50	2–1/2 65	3 80	4 100	6 150	8 200	10 250
Class900	L–L1 (RF–BW)	in. mm	14.5 368	16.5 419	15 381	18 457	24 610	29 737	33 838
	L2 (RTJ)	in. mm	14.62 371	16.62 422	15.12 384	18.12 460	24.12 613	29.12 740	33.12 841
	H (open)	in. mm	9.44 240	10.25 260	10.25 260	12.63 320	15 382	20.88 530	27.17 690
	Do	in. mm	13.75 350	15.75 400	17.75 450	22.06 560	24 610	24 610	24 610
	WT (kg)	RF BW	100 75	118 94	131 105	218 185	452 340	710 630	2050 1870
Class1500	L–L1 (RF–BW)	in. mm	14.5 368	16.5 419	18.5 470	21.5 546	27.75 705	32.75 832	--
	L2 (RTJ)	in. mm	14.62 371	16.62 422	18.62 473	21.62 549	28 711	33.13 842	--
	H (open)	in. mm	23.31 592	26 660	27.25 692	35.69 907	40 1015	4506 1145	--
	Do	in. mm	13.75 350	15.75 400	17.75 450	22.06 560	24 610	24 610	--
	WT (kg)	RF BW	112 84	141 115	228 183	336 277	822 715	990 830	--
Class2500	L–L1 (RF–BW)	in. mm	17.75 451	20 508	22.75 578	26.5 673	36 914	--	--
	L2 (RTJ)	in. mm	17.87 454	20.25 514	23 584	26.88 683	36.5 927	--	--
	H (open)	in. mm	27.25 692	29.5 750	31.5 800	47.25 1200	75 1905	--	--
	Do	in. mm	15.75 400	19.69 500	24 610	30 760	30 750	--	--
	WT (kg)	RF BW	182 153	290 230	340 272	820 670	2300 2000	--	--

Technical Specification

Design and manufacture: BS 1873, ASME B16.34.
Face–to–Face dimension: ASME B16.10
Flanged End: ASME B16.5
B.W.End: ASME B16.25
Shell Wall Thickness: BS 1873, ASME B16.34
Inspection & Test: API 598

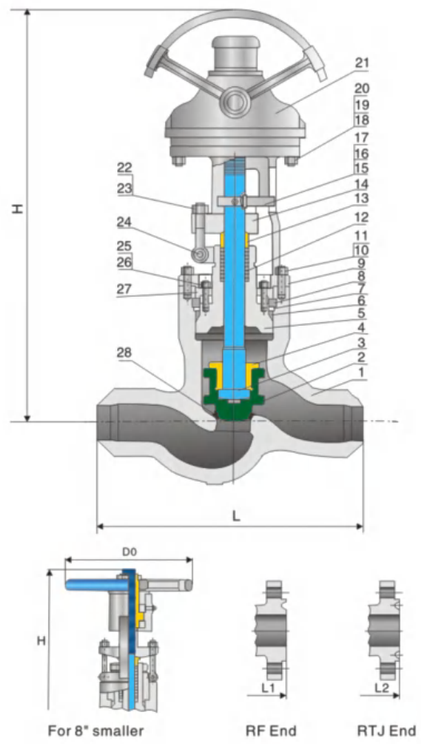

Main Parts and Materials

No	Parts	Material
1	Body	ASTM A216 Gr.WCB
2	Disc	ASTM A105+13Cr
3	Stem	ASTM A182 F6a
4	Disc nut	ASTM A276 410
5	Bonnet	ASTM A216 Gr.WCB
6	Sealing ring	ASTM A182 F304
7	Spacer ring	ASTM A182 F6a
8	Sealing ring	ASTM A182 F6a
9	Yoke	ASTM A216 Gr.WCB
10	Bolt	ASTM A193 Gr.B7
11	Nut	ASTM A194 Gr.2H
12	Packing	Graphite
13	Gland	ASTM A276 410
14	Gland flange	ASTM A216 Gr.WCB
15	Pin	C.S.
16	Bolt	C.S.
17	Stem guide collar	C.S.
18	Bolt	C.S.
19	Nut	C.S.
20	Washer	C.S.
21	Gear box	Assembly
22	Gland bolt	ASTM A193 Gr.B7
23	Gland nut	ASTM A194 Gr.2H
24	Pin	ASTM A276 410
25	Stud	ASTM A193 Gr.B7
26	Nut	ASTM A194 Gr.2H
27	Supporting plate	ASTM A105
28	Seat surface	STL No.6

Note: Available LCB, LCC, WC6, C5, WC9, C12, CF8, CF8M,4A, 5A etc for body material. And trim can be customized upon request.

Main Dimensions and Weights

Class 900	Valve Size	in. mm	2 50	2–1/2 65	3 80	4 100	6 150	8 200
	(RF–BW)(L–L1)	in. mm	14.5 368	16.5 419	15 381	18 457	24 610	29 737
	RTJ (L2)	in. mm	14.62 371	16.62 422	15.12 384	18.12 460	24.12 613	29.12 740
	Open (H)	in. mm	21.65 550	23.82 605	26.70 678	31.42 798	36.61 930	49.61 1260
	Do	in. mm	13.78 350	13.78 350	15.75 400	17.72 450	18.03 458	24 610
	WT (kg)	RF–BW	76 64	106 89	100 85	140 126	388 353	958 866
Class 1500	Valve Size	in. mm	14.5 368	16.5 419	18.5 470	21.5 546	27.75 705	32.75 832
	(RF–BW)(L–L1)	in. mm	14.62 371	16.62 422	18.62 473	21.62 549	28 711	33.13 842
	RTJ (L2)	in. mm	21.65 550	23.82 605	34.10 866	37.64 956	49.61 1260	49.72 1263
	Do	in. mm	15.75 400	15.75 400	17.72 450	22.05 560	24 610	24 610
	WT (kg)	RF–BW	83 75	108 99	132 120	228 207	658 593	1588 1438
Class 2500	Valve Size	in. mm	17.75 451	20 508	22.75 578	26.50 673	36 914	40.25 1022
	(RF–BW)(L–L1)	in. mm	17.87 454	20.25 514	23 584	26.88 683	36.50 927	40.87 1038
	RTJ (L2)	in. mm	22.05 560	28.35 720	29.72 755	48.43 1230	70.51 1791	82.13 2086
	Do	in. mm	15.75 400	17.72 450	22.05 560	12.2 310	24 610	30 760
	WT(kg)	RF–BW	138 98	166 116	245 178	618 436	1498 1146	3198 2592

Features

Design and manufacture:
BS 1873 and ASME B16.34
Stem indicator
Disc hard–surfaced
Integral hard–surfaced seats
Guide ribs
Pressure seal gasket
B.W.End to ASME B 16.25
Low pressure drops

Y-Pattern Stop Valves

Y–Pattern Stop Valves are available in stop configurations for critical high temperature & high pressure services, Many design features incorporated into stop valves–drop tight shut–off,low pressure drop,piping flexibility–are also included in stop valves.In addition, an Equalizer pipe is provided to help achieve full disk lift as well as reduce wear–producing turbulence.

Main Parts and Materials

No	Parts	Material
1	Body	ASTM A216 Gr.WCB
2	Seat surface	Stellite
3	Disc	ASTM A105+13Cr
4	Split ring	ASTM A182 F6a
5	Bolt	S.S.
6	Stem	ASTM A182 F6a
7	Disc guide	ASTM A276 410
8	Bonnet	ASTM A216 Gr.WCB
9	Sealing ring	ASTM A182 F304
10	Spacer ring	ASTM A182 F6a
11	Sealing ring	ASTM A182 F6a
12	Supporting plate	ASTM A 105
13	Yoke lock ring	ASTM A216 Gr.WCB
14	Bolt	ASTM A193 Gr.B7
15	Nut	ASTM A194 Gr.2H
16	Gland	ASTM A276 410
17	Gland flange	ASTM A216 Gr.WCB
18	Stem guide call	C.S.
19	Yoke	ASTM A216 Gr.WCB
20	Bushing	Assemly
21	Stem nut	Aluminum Bronze
22	Gear box	Assemly
23	Bolt	C.S.
24	Washer	C.S.
25	Pin	C.S.
26	Bolt	C.S.
27	Stud	ASTM A193 Gr.B7
28	Nut	ASTM A194 Gr.2H
29	Pin	C.S.
30	Packing	Graphite
31	Lock ring bolt	ASTM A193 Gr.B7
32	Lock ring nut	ASTM A194 Gr.2H

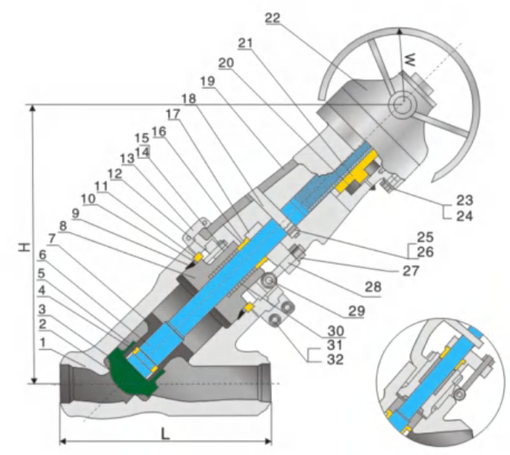

Note: Available LCB, LCC, WC6, C5, WC9, C12, CF8, CF8M,4A, 5A etc for body material. And trim can be customized upon request.

Main Dimensions and Weights

Class 900	Valve Size	in. mm	2 50	2–1/2 65	3 80	4 100	6 150	8 200	10 250	12 300	14 350	16 400
	BW(L)	in. mm	13.3 338	15.4 391	17 432	18.5 470	20 508	26 660	31 787	38 965	38 965	44.5 1130
	Open	in. mm	15 380	16.5 420	18.11 460	23.23 590	32.28 820	41.34 1050	50 1270	58.27 1480	61.02 1550	70.08 1780
	W	in. mm	12.2 310	12.2 310	18.11 460	18.11 460	18.11 460	24 610	24 610	24 610	24 610	24 610
	WT(kg)	kg	78	84	92	131	258	553	992	1603	1825	2579
Class 1500	BW (L)	in. mm	13.3 338	15.4 391	17 432	18.5 470	27.75 705	30 762	36.25 921	43 1092	—	—
	Open	in. mm	15 380	16.5 420	15.16 385	15.16 385	18.5 470	26.06 662	34.76 883	58.28 1480	—	—
	W	in. mm	12.2 310	12.2 310	18.11 460	18.11 460	18.11 460	24 610	24 610	24 610	—	—
	WT(kg)	kg	83	95	115	148	362	759	1320	2062	—	—
Class 2500	BW (L)	in. mm	13.3 338	15.4 391	17 432	18.5 470	27.75 705	30 762	36.25 9921	—	—	—
	Open	in. mm	15 380	16.5 420	15.16 385	16.54 420	26.89 683	28.35 720	35.12 892	—	—	—
	W	in. mm	12.2 310	18.11 460	18.11 460	18.11 460	18.11 460	24 610	24 610	—	—	—
	WT(kg)	kg	93	106	122	163	461	790	1330	—	—	—

Class 150/300/600 Forged steel flanged globe valve

Technical Specification

1、Design and manufacture: API 602, BS 5352.
2、Consturction feature: B.B OS&Y or WB OS&Y
3、Face to face dimensions: ANSI B16.10.
4、Flanged connection: ANSI B 16.5.
5、Test and inspection: API 598.
6、Available LF2, F5, F9, F11, F22, F304(L), F316(L), aluminium bronze, inconel, monel etc for body material. And trim can be customized upon request.

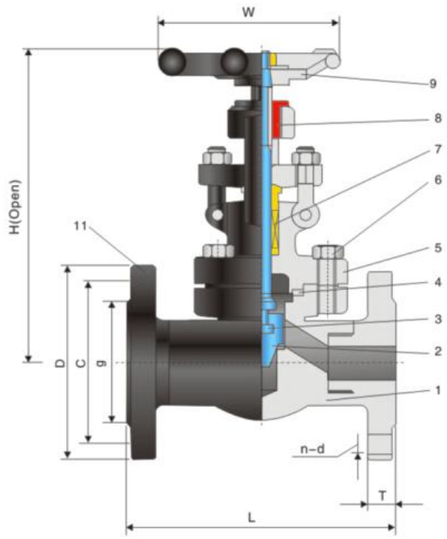

600Lb

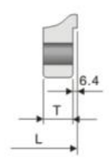

Main Parts and Materials

No	Parts	Material
1	Body	A105
2	Disc	13Cr
3	Stem	A182-F6a
4	Gasket	304S.S. Jacketed Graphite
5	Bonnet	A105
6	Bolt	A193-B7
7	Packing	Graphite
8	Stem nut	13Cr
9	Handwheel	Malleable Iron
10	Flange	A105

Main Dimensions and Weights

DN		Class	L	D	C	g	T	n-d	H(Open)		W		WT(kg)	
Inch	mm								Reduced Bore	Full Bore	Reduced Bore	Full Bore	Reduced Bore	Full Bore
1/2"	15	150	108	90	60.5	35	11.5	4-16	158	163	100	100	4.5	6.9
		300	152	95	66.5		14.5	4-16					4.8	7.7
		600	165	95	66.5		14.5	4-16					5.6	7.8
3/4"	20	150	117	100	70	43	13	4-16	163	193	100	125	6.9	9.8
		300	178	115	82.5		16	4-19					7.7	11.3
		600	190	115	82.5		16	4-19					7.8	12.5
1"	25	150	127	110	79.5	51	14.5	4-16	193	250	125	160	9.8	13.5
		300	203	125	89		18	4-19					11	16.8
		600	216	125	89		18	4-19					12.5	17.5
1 1/4"	32	150	140	115	89	63	16	4-16	250	250	160	160	13.5	19.5
		300	216	135	98.5		19.5	4-19					16.8	21.2
		600	229	135	98.5		21	4-19					17	23.5
1 1/2"	40	150	165	125	98.5	73	18	4-16	250	291	160	180	19.5	28.5
		300	229	155	114.5		21	4-22.5					21.2	32.6
		600	241	155	114.5		22.5	4-22.5					23.5	38.5
2"	50	150	203	150	120.5	92	19.5	4-19	291	312	180	200	28	30.3
		300	267	165	127		22.5	8-19					32.6	35
		600	292	165	127		26	8-19					38.8	42.2

Class 800 Forged steel NPT, socket weld globe valve

Technical Specification

1、Design and manufacturing per API 602, BS 5352.
2、Consturction feature: B.B OS&Y or W.B OS&Y
3、FNPT connection: ANSI B1.20.1
Socket weld connection: ANS B 16.11
4、Test and inspection: API 598.
5、Available LF2, F5, F9, F11, F22, F304(L), F316(L), aluminium bronze, inconel, monel etc for body material. And trim can be customized upon request.

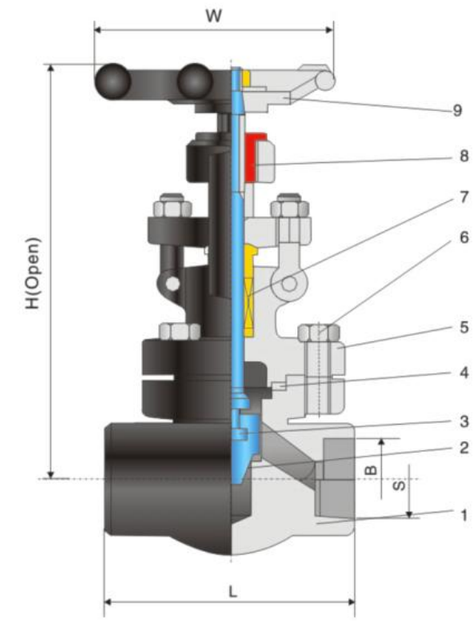

Main Parts and Materials

No	Parts	Material
1	Body	A105
2	Disc	13Cr
3	Stem	A182-F6a
4	Gasket	304S.S. Jacketed Graphite
5	Bonnet	A105
6	Bolt	A193-B7
7	Packing	Graphite
8	Stem nut	13Cr
9	Handwheel	Malleable Iron

Main Dimensions and Weights

DN				L	B(SW)				S(Screwed)				H (Open)	W	WT(kg)	
Inch		mm			ANSI		JIS		ANSI60°		ISO、BS、JIS50°					
Reduced Bore	Full Bore	Reduced Bore	Full Bore		Reduced Bore	Full Bore	Reduced Bore	Full Bore	Reduced Bore	Full Bore	Reduced Bore	Full Bore			Reduced Bore	Full Bore
1/2"	--	15	--	80	21.8	--	22.2	--	1/2"	--	1/2"	--	158	100	1.9	--
3/4"	1/2"	20	15	92	27.1	21.8	27.7	22.2	3/4"	1/2"	3/4"	1/2"	192	100	2.1	2.3
1"	3/4"	25	20	111	33.8	27.1	34.5	27.7	1"	3/4"	1"	3/4"	252	125	3.3	3.6
1 1/4"	1"	32	25	120	42.6	33.8	43.2	34.5	1 1/4"	1"	1 1/4"	1"	252	160	7.5	7.8
1 1/2"	1 1/4"	40	32	152	48.7	42.6	49.1	43.2	1 1/2"	1 1/4"	1 1/2"	1 1/4"	289	160	7.5	8.2
2"	1 1/2"	50	40	172	61.1	48.7	61.1	49.1	2"	1 1/2"	2"	1 1/2"	330	180	11.4	12
--	2"	--	50	200	--	61.1	--	61.1	--	2"	--	2"	370	240	--	15

Technical Specification

1、Design and manufacture: API 602, BS 5352.
2、Consturction feature: PSB OS&Y or WB OS&Y
3、FNPT connection: ANSI B1.20.1
Socket weld connection: ANS B 16.11
4、Test and inspection: API 598.
5、Available LF2, F5, F9, F11, F22, F304(L), F316(L), aluminium bronze, inconel, monel etc for body material. And trim can be customized upon request.

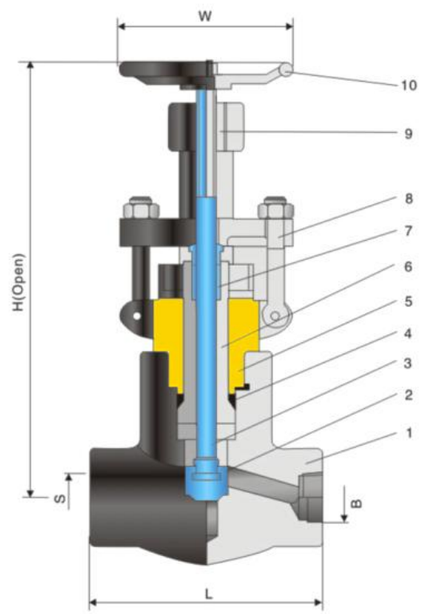

Main Parts and Materials

No	Parts	Material
1	Body	A105
2	Disc	13Cr
3	Stem	A182-F6a
4	Sealed ring	304
5	Yoke	A105
6	Bonnet	A105
7	Packing	Graphite
8	Bolt	A193-B7
9	Stem nut	13Cr
10	Handwheel	Malleable Iron

Main Dimensions and Weights

DN		L		B(SW)		S(Screwed)			H (Open)	W	WT(kg)	
inch	mm	Class900 Class1500	Class2500	ANSI	JIS	ANSI APT60°	ISO、BS RC60°	JIS PT50°			Class900 Class1500	Class2500
1/2"	15	140	186	21.8	22.2	1/2"			333	125	10.1	10.8
3/4"	20	140	186	27.1	27.7	3/4"			333	125	10.8	11.6
1"	25	140	186	33.8	34.5	1"			333	160	11.2	12.3
1 1/4"	32	178	232	42.6	43.2	1 1/4"			408	160	21.0	28.0
1 1/2"	40	178	232	48.7	49.1	1 1/2"			408	180	19.6	26.4
2"	50	216	279	61.1	61.1	2"			524	200	40.4	43.8

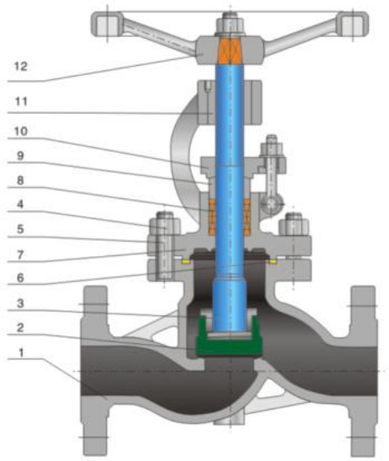

Standards

Design and Manufacture: BS 1873, BS EN 558-1
Face to Face Dimensions: DIN3202, EN 1092-1
Flange Ends Dimensions: DIN2543,
DIN2544, DIN2545, DIN2546,
DIN2547, DIN2548
Test & Inspect: DIN 3230

Parts and Material list

Part Name		Material				
		Trim 1	Trim 8	Trim 5		
1	Body	DIN 17245 GS-C25+CR13	DIN 17245 GS-C25+STL	DIN 17245 GS-C25+STL	DIN 17445 1.4308	DIN 17445 1.4408
2	Disc	DIN 17245 GS-C25+CR13	DIN 17245 GS-C25+CR13	DIN 17245 GS-C25+STL	DIN 17445 1.4308	DIN 17445 1.4408
7	Bonnet	DIN 17245 GS-C25+CR13	DIN 17245 GS-C25+CR13	DIN 17245 GS-C25+CR13	DIN 17445 1.4308	DIN 17445 1.4408
9	Gland	ASTM A182 F6a			ASTM A182 F304	ASTM A182 F316
10	Gland Flange	DIN 17245 GS-C25			DIN 17445 1.4308	DIN 17445 1.4408
3	Stem	ASTM A182 F6a			ASTM A182 F304	ASTM A182 F304
4	Nut	A194 2H			A194 8	A194 8
5	Bolt	A193 B7			A193 B8	A193 B8
6	Gasket	SS Spiral Wound W/graphite,or SS Spiral Wound W/PTFE,or Reinforced PTFE				
8	Packing	Braided Graphite or reformed Graphite Ring or PTFE				
11	Stem Nut	Copper alloy or A439 D2				
12	Hand Wheel	Ductile iron or Carbon steel				

Noted: The chart above only lists out some common composition of steel globe valve. We may provide other different parts material composition according to the customer's request or the actual valve working condition

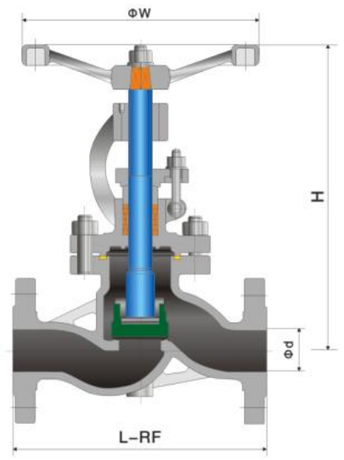

BW End

Dimensions

PN16(DIN 3202-F1)																			
DN	mm	15	20	25	32	40	50	65	80	100	125	150	200	250	300	350	400	450	500
L-RF	mm	130	150	160	180	200	230	290	310	350	400	480	600	730	850	980	1100	1200	1250
L-BW	mm	130	150	160	180	200	230	290	310	350	400	480	600	730	850	980	1100	1200	1250
H	mm	190	210	235	235	285	310	340	370	420	480	510	610	770	890	–	–	–	–
W	mm	120	140	160	180	200	200	250	280	300	360	400	400	450	500	–	–	–	–
PN25(DIN 3202-F1)																			
DN	mm	15	20	25	32	40	50	65	80	100	125	150	200	250	300	350	400	–	–
L-RF	mm	130	150	160	180	200	230	290	310	350	400	480	600	730	850	980	1100	–	–
L-BW	mm	130	150	160	180	200	230	290	310	350	400	480	600	730	850	980	1100	–	–
H	mm	190	210	235	235	285	310	340	370	420	480	535	660	790	940	1010	1125	–	–
W	mm	120	140	160	180	200	200	250	280	300	360	400	400	450	500	–	–	–	–
PN40(DIN 3202-F1)																			
DN	mm	15	20	25	32	40	50	65	80	100	125	150	200	250	300	350	400	–	–
L-RF	mm	130	150	160	180	200	230	290	310	350	400	480	600	730	850	980	1100	–	–
L-BW	mm	130	150	160	180	200	230	290	310	350	400	480	600	730	850	980	1100	–	–
H	mm	190	210	235	235	285	310	340	370	420	480	560	725	815	945	1015	1150	–	–
W	mm	120	140	160	180	200	200	250	280	300	360	500	500	–	–	–	–	–	–
PN63(DIN 3202-F2)																			
DN	mm	15	20	25	32	40	50	65	80	100	125	150	200	250	300	–	–	–	–
L-RF	mm	210	230	230	260	260	300	340	380	430	500	550	650	775	900	–	–	–	–
L-BW	mm	210	230	230	260	260	300	340	380	430	500	550	650	775	900	–	–	–	–
W	mm	210	248	275	355	395	450	494	531	588	650	715	813	–	–	–	–	–	–
PN100(DIN 3202-F2)																			
DN	mm	15	20	25	32	40	50	65	80	100	125	150	200	250	300	–	–	–	–
L-RF	mm	210	230	230	260	260	300	340	380	430	500	550	650	775	900	–	–	–	–
L-BW	mm	210	230	230	260	260	300	340	380	430	500	550	650	775	900	–	–	–	–
W	mm	210	248	275	355	395	450	494	531	588	650	715	813	–	–	–	–	–	–

Noted: We may provide other different actuators according to the customer's request,such as pneumatic,electic,hydraulic actuators,th e details of them according to the actual valve working condition.

Noted: The face to face demension of BW-end-valve is the same as that of flanged-end-valve.

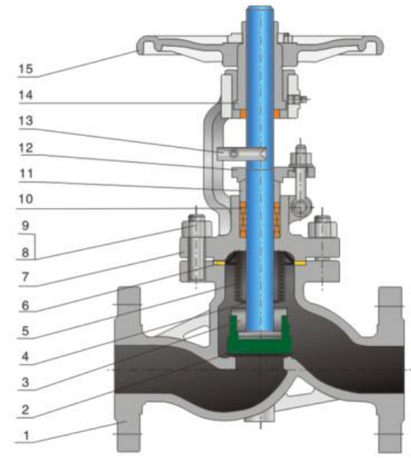

Standards

Design and Manufacture: DIN 3356,BS 1873
Face to Face Dimensions: DIN3202,EN 558-1
Flange Ends Dimensions: DIN2543-2545,EN 1092-1
Test & Inspect: DIN 3230,BS EN 12569

Structure Feature

1.Double seal, more reliable performance,
2.Stem lift position indication, more intuitive,
3.Small flow reJIStance, low pressure drop.

Parts and Material list

Part Name		Material				
1	Body	DIN 17245 GS-C25+CR13	DIN 17245 GS-C25+STL	DIN 17245 GS-C25+STL	DIN 17445 1.4308	DIN 17445 1.4408
2	Disc	DIN 17245 GS-C25+CR13	DIN 17245 GS-C25+CR13	DIN 17245 GS-C25+STL	DIN 17445 1.4308	DIN 17445 1.4408
7	Bonnet	DIN 17245 GS-C25	DIN 17245 GS-C25	DIN 17245 GS-C25	DIN 17445 1.4308	DIN 17445 1.4408
3	Disc Cover	ASTM A182 F6a			ASTM A182 F304	ASTM A182 F316
4	Stem	ASTM A182 F6a			ASTM A182 F304	ASTM A182 F316
5	Bellows Seal	SS304			SS304	SS316
8	Bolt	ASTM A193 B7			ASTM A194 8	ASTM A194 8
9	Nut	ASTM A194 2H			ASTM A193 B8	ASTM A193 B8
11	Gland	ASTM A182 F6a			ASTM A182 F304	ASTM A182 F316
12	Gland Flange	DIN 17245 GS-C25			DIN 17445 1.4308	DIN 17445 1.4408
13	Guide Block	DIN 17245 GS-C25			DIN 17445 1.4308	DIN 17445 1.4408
6	Gasket	Flexibe Graphite+SS,TFE,or Reinforced PTFE				
10	Packing	Braided Craphite or reformed Graphite Ring or PTFE				
14	Stem Nut	Copper Alloy or A439 D2				
15	Hand wheel	Ductile Iron or Carbon steel				

Noted: Conection flange of series valve may be manufactured by customer's requirement.

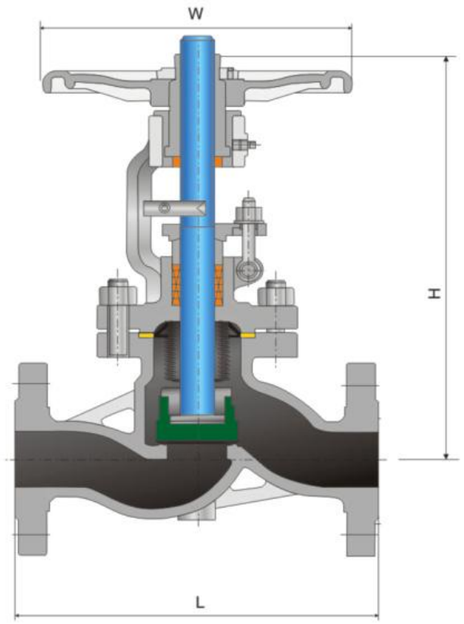

Dimensions

PN16(DIN 3202-F1)															
DN	15	20	25	32	40	50	65	80	100	125	150	200	250	300	350
L	130	150	160	180	200	230	290	310	350	400	480	600	730	850	980
H	195	200	220	225	235	250	260	265	370	400	515	550	600	630	680
W	120	120	140	160	160	180	200	220	250	300	350	400	450	500	500
PN25(DIN 3202-F1)															
DN	15	20	25	32	40	50	65	80	100	125	150	200	250	300	350
L	130	150	160	180	200	230	290	310	350	400	480	600	730	850	980
H	195	200	220	225	235	250	260	265	370	400	515	550	600	630	680
W	120	140	140	160	160	180	200	220	250	300	350	400	450	500	500
PN40(DIN 3202-F1)															
DN	15	20	25	32	40	50	65	80	100	125	150	200	250	300	350
L-RF	130	150	160	180	200	230	290	310	350	400	480	600	730	850	980
H	195	200	220	225	235	250	260	265	370	400	515	550	600	630	680
W	120	140	140	160	160	180	200	220	250	300	350	400	450	500	500

Check Valve Series

Class 150 Bolted cover, swing type disc

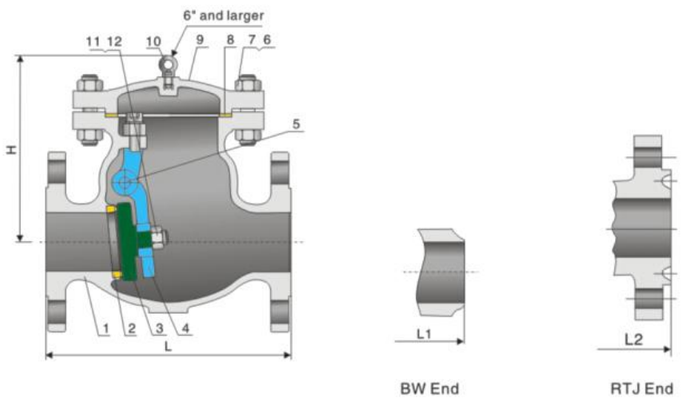

Main Parts and Materials

No	Parts	Material
1	Body	ASTM A216 Gr.WCB
2	Seat ring	ASTM A105+13Cr
3	Disc	ASTM A216 Gr.WCB+13Cr
4	Hinge	ASTM A216 WCB
5	Hinge pin	ASTM A276 410
6	Cover bolt	ASTM A193 Gr.B7
7	Cover nut	ASTM A194 Gr.2H
8	Gasket	304S.S. Jacketed Graphite
9	Cover	ASTM A216 Gr.WCB
10	Eye bolt	C.S.
11	Nut	304S.S.
12	Washer	ASTM A276 410

Features

Design and manufacture: BS 1868, API 6D, ASME B16.34
Face–to–Face dimension: ASME B16.10, JIS B2002
Flanged dimension: 24" and smaller valves: ASME B16.5,
26" and larger valves: ASME B 16.47 series A and B
B. W. End: ASME B 16.25
Shell Wall Thickness: BS1868, ASME B16.34
26" and larger to manufacturer s standard
Inspection & Test: API 598, API 6D

Note: Available LCB, LCC, WC6, C5, WC9, C12, CF8, CF8M,4A, 5A etc for body material.And trim can be customized upon request.

Dimensions & Weights Class 150

Valve Size	in.	1–1/2	2	2–1/2	3	4	5	6	8	10	12	14	16	18	20	24	30	36
	mm	40	50	65	80	100	125	150	200	250	300	350	400	450	500	600	750	900
L–L1 (RF–BW)	in.	6.5	8	8.5	9.5	11.5	13	14	19.5	24.5	27.5	31	34	38.5	38.5	51	60	77
	mm	165	203	216	241	292	330	356	495	622	698	787	864	978	978	1295	1524	1956
L2 (RTJ)	in.	7.0	8.5	9	10	12	13.5	14.5	20	25	28	31.5	34.5	39	39	51.5	60.5	77.5
	mm	178	216	229	254	305	343	369	508	635	711	800	877	991	991	1308	1537	1969
H (open)	in.	6.69	6.88	7	7.5	8.63	9.25	12.75	15.13	17.63	21.25	22	24.63	25.63	26.63	34.63	45.25	53.13
	mm	170	175	178	191	219	235	324	384	448	540	559	626	651	676	880	1149	1349
WT (kg)	RF	18	20	24	35	55	84	96	160	245	345	510	660	850	1050	1450	2350	3350
	BW	12	14	17	26	37	52	80	133	213	294	440	568	750	920	1270	2250	3150

Class 300 Bolted cover, swing type disc

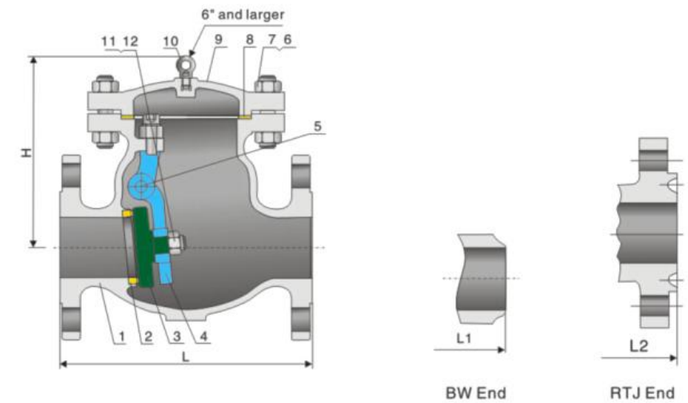

Main Parts and Materials

No	Parts	Material
1	Body	ASTM A216 Gr.WCB
2	Seat ring	ASTM A105+13Cr
3	Disc	ASTM A216 Gr.WCB+13Cr
4	Hinge	ASTM A216 WCB
5	Hinge pin	ASTM A276 410
6	Cover bolt	ASTM A193 Gr.B7
7	Cover nut	ASTM A194 Gr.2H
8	Gasket	304S.S. Jacketed Graphite
9	Cover	ASTM A216 Gr.WCB
10	Eye bolt	C.S.
11	Nut	304S.S.
12	Washer	ASTM A276 410

Features

Design and manufacture: BS1868, API 6D, ASME B16.34
Face–to–Face dimension: ASME B16.10, JIS B2002
Flanged dimension: 24" and smaller valves: ASME B16.5
26" and larger valves: ASME B 16.47 series A and B
B. W. End: ASME B 16.25
Shell Wall Thickness: BS1868, ASME B16.34
26" and larger to manufacturer s standard
Inspection & Test: API 598, API 6D

Note: Available LCB, LCC, WC6, C5, WC9, C12, CF8, CF8M,4A, 5A etc for body material.And trim can be customized upon request.

Dimensions & Weights Class300

Valve Size	in.	1–1/2	2	2–1/2	3	4	5	6	8	10	12	14	16	18	20	24	30	36
	mm	40	50	65	80	100	125	150	200	250	300	350	400	450	500	600	750	900
L–L1 (RF–BW)	in.	9.5	10.5	11.5	12.5	14	15.75	17.5	21	24.5	28	33	34	38.5	40	53	62.75	82
	mm	241	267	292	318	356	400	444	533	622	711	838	864	978	1016	1346	1594	2083
L2 (RTJ)	in.	10	11.12	12.12	13.15	14.62	16.37	18.12	21.62	25.12	28.62	33.62	34.62	39.12	40.75	53.88	63.75	83.11
	mm	254	283	308	334	372	416	460	549	638	727	854	880	994	1035	1368	1619	2111
H (open)	in.	7.4	7.75	8	8.75	10.88	11.63	13.25	16.25	18.25	22.13	23.5	25.38	29.88	33.63	37	50	60.63
	mm	188	197	203	222	276	295	337	413	464	562	597	645	759	854	940	1270	1540
WT (kg)	RF	31	35	37	60	82	110	155	268	380	495	710	950	1200	1350	2200	3400	5000
	BW	28	32	35	50	65	70	128	230	270	460	555	800	970	1070	1780	2950	4300

Class 600 Bolted cover, swing type disc

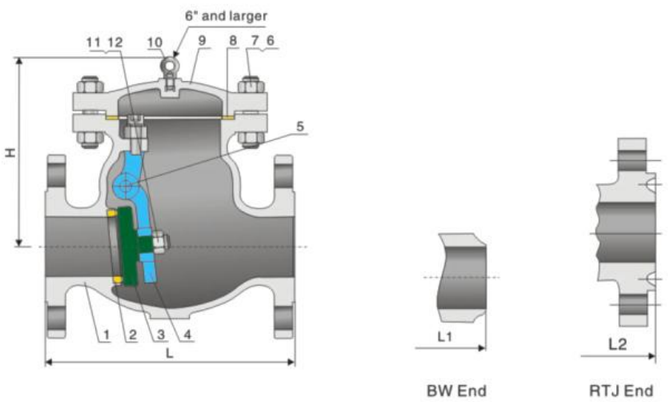

Main Parts and Materials

No	Parts	Material
1	Body	ASTM A216 Gr.WCB
2	Seat ring	ASTM A105+13Cr
3	Disc	ASTM A216 Gr.WCB+13Cr
4	Hinge	ASTM A216 WCB
5	Hinge pin	ASTM A276 410
6	Cover bolt	ASTM A193 Gr.B7
7	Cover nut	ASTM A194 Gr.2H
8	Gasket	304S.S. Jacketed Graphite
9	Cover	ASTM A216 Gr.WCB
10	Eye bolt	C.S.
11	Nut	304S.S.
12	Washer	ASTM A276 410

Features

Design and manufacture: BS1868, API 6D, ASME B16.34
Face–to–Face dimension: ASME B16.10
Flanged dimension: 24" and smaller valves: ASME B16.5
26" and larger valves: ASME B 16.47 series A and B
B. W. End: ASME B 16.25
Shell Wall Thickness: BS1868, ASME B16.34
26" and larger to manufacturer s standard
Inspection & Test: API 598, API 6D

Note: Available LCB, LCC, WC6, C5, WC9, C12, CF8, CF8M,4A, 5A etc for body material.And trim can be customized upon request.

Dimensions & Weights

Valve Size	in. / mm	2 / 50	2–1/2 / 65	3 / 80	4 / 100	6 / 150	8 / 200	10 / 250	12 / 300	14 / 350	16 / 400	18 / 450	20 / 500	24 / 600	26 / 650	28 / 700	30 / 750
L–L1 (RF–BW)	in.	11.5	13	14	17	22	26	31	33	35	39	43	47	55	57	63	65
	mm	292	330	356	432	559	660	787	838	889	991	1092	1194	1397	1448	1600	1651
L2 (RTJ)	in.	11.62	13.12	14.12	17.12	22.12	26.12	31.12	33.12	35.12	39.12	43.12	47.25	55.38	57.5	63.5	65.5
	mm	295	333	359	435	562	663	790	841	892	994	1095	1200	1407	1461	1613	1664
H (open)	in.	8.25	8.63	10.5	11.75	15	18.75	21.63	22.63	26.38	30.13	35.25	38.38	43.75	48	53.13	56.25
	mm	210	219	267	299	381	476	549	575	670	765	895	975	1111	1219	1349	1429
WT (kg)	RF	40	55	72	120	270	420	620	810	1100	1450	1800	2100	3000	3500	4100	5000
	BW	31	45	60	85	225	365	500	715	880	1140	1450	1650	2300	3000	3500	4300

Class 900/1500/2500 Bolted cover, swing type disc

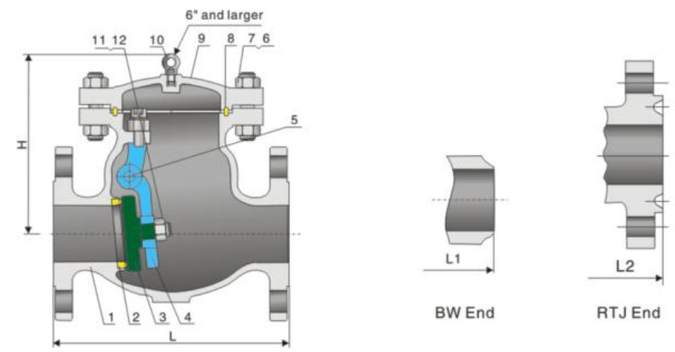

Main Parts and Materials

No	Parts	Material
1	Body	ASTM A216 Gr.WCB
2	Seat ring	ASTM A105+13Cr
3	Disc	ASTM A216 Gr.WCB+13Cr
4	Hinge	ASTM A216 WCB
5	Hinge pin	ASTM A276 410
6	Cover bolt	ASTM A193 Gr.B7
7	Cover nut	ASTM A194 Gr.2H
8	Gasket	304S.S. Jacketed Graphite
9	Cover	ASTM A216 Gr.WCB
10	Eye bolt	C.S.
11	Nut	304S.S.
12	Washer	ASTM A276 410

Features

Design and manufacture: BS1868, API 6D, ASME B16.34
Face–to–Face dimension: ASME B 16.10
Flanged dimension: ASME B16.5
B.W. End: ASME B16.25
Shell Wall Thickness: BS1868, ASME B16.34
Inspection & Test: API 598, API 6D

Note: Available LCB, LCC, WC6, C5, WC9, C12, CF8, CF8M,4A, 5A etc for body material. And trim can be customized upon request.

Dimensions & Weights

	Valve Size	in. / mm	2 / 50	2–1/2 / 65	3 / 80	4 / 100	6 / 150	8 / 200	10 / 250	12 / 300
Class 900	L–L1 (RF–BW)	in.	14.5	16.5	15	18	24	29	33	38
		mm	368	419	381	457	610	737	838	965
	L2 (RTJ)	in.	14.62	16.62	15.12	18.12	24.12	29.12	33.12	38.12
		mm	371	422	384	460	613	740	841	968
	H (open)	in.	12.63	13.75	12.63	16	18.88	22.25	26.13	30.5
		mm	321	349	321	406	479	565	664	775
	WT (kg)	RF	70	160	90	150	305	516	810	1120
		BW	50	71	68	113	230	387	632	901
Class 1500	L–L1 (RF–BW)	in.	14.5	16.5	18.5	21.5	27.75	32.75	39	44.5
		mm	368	419	470	546	705	832	991	1130
	L2 (RTJ)	in.	14.62	16.62	18.62	21.62	28	33.15	39.4	45.12
		mm	371	422	473	549	711	842	1001	1146
	H (open)	in.	12.63	13.75	14.38	16.5	20.13	26.75	29.75	33.75
		mm	321	349	365	419	511	680	756	857
	WT (kg)	RF	70	110	170	300	695	1190	1850	2750
		BW	50	87	135	245	560	965	1480	2180
Class 2500	L–L1 (RF–BW)	in.	17.75	20	22.75	26.5	36	40.25	50	56
		mm	451	508	578	673	914	1022	1270	1422
	L2 (RTJ)	in.	17.87	20.25	23	26.88	36.5	40.87	50.88	56.88
		mm	454	514	584	683	927	1038	1292	1444
	H (open)	in.	16.38	16.5	17.38	18.88	20.13	28	33.5	39.38
		mm	416	419	441	479	511	711	851	1000
	WT (kg)	RF	150	240	350	650	1450	2550	3950	5700
		BW	120	195	280	540	1200	2200	3150	4550

Class 900/1500/2500 Pressure seal cover, swing type disc

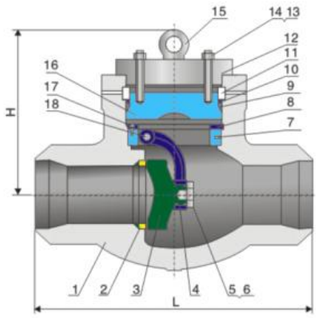

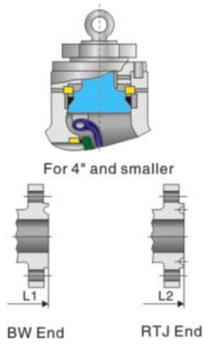

Features

Design and manufacture: BS1868, API 6D, ASME B16.34
Face-to-Face dimension: ASME B16.10
Flanged dimension: ASME B16.5
Shell Wall Thickness: BS1868, ASME B16.34
Inspection & Test: API 598, API 6D

Note: Available LCB, LCC, WC6, C5, WC9, C12, CF8, CF8M,4A, 5A etc for body material. And trim can be customized upon request.

Main Parts and Materials

No	Parts	Material	No	Parts	Material
1	Body	ASTM A216 Gr.WCB	10	Gasket	ASTM A182 F6a
2	Seat ring	ASTM A105+Stellite	11	Segment ring	ASTM A182 F6a
3	Disc	ASTM A216 Gr.WCB+13Cr	12	Cover	ASTM A216 Gr.WCB
4	Hinge	ASTM A216 Gr.WCB	13	Stud	ASTM A193 Gr.B7
5	Screw pin	ASTM A276 410	14	Nut	ASTM A194 Gr.2H
6	Screw	ASTM A276 410	15	Eyebolt	C.S.
7	Locking pin	ASTM A276 410	16	Bonnet	ASTM A216 Gr.WCB
8	Locking ring	ASTM A105	17	Bolt	S.S.
9	Seal ring	ASTM A182 F304	18	Pin	ASTM A276 410

Main Dimensions & Weights

	Valve Size	in. mm	2 50	2-1/2 65	3 80	4 100	6 150	8 200	10 250	12 300	14 350	16 400
Class 900	L (BW)	in. mm	8.5 216	10 254	12 305	14 356	20 508	26 660	30 787	36 914	39 991	43 1092
	L1 (RF)	in. mm	14.5 368	16.5 419	15 381	18 457	24 610	29 737	33 838	38 965	40.5 1029	44.5 1130
	L2 (RTJ)	in. mm	14.62 371	16.62 422	15.12 384	18.12 460	24.12 613	29.12 740	33.12 841	38.12 968	40.88 1038	44.88 1140
	H (open)	in. mm	7.4 188	8.27 210	8.27 210	8.5 216	14.5 368	20.12 511	24.17 614	27.76 705	28.98 736	29.76 756
	WT (kg)	RF BW	48 33	63 44	60 42	122 76	254 177	511 383	938 703	1448 1128	1723 1353	1832 1463
Class 1500	L (BW)	in. mm	8.5 216	10 254	12 305	16 406	22 559	28 711	34 864	39 991	42 1067	47 1194
	L1 (RF)	in. mm	14.5 368	16.5 419	18.5 470	21.5 546	27.75 705	32.75 832	39 991	44.5 1130	49.5 1257	54.5 1384
	L2 (RTJ)	in. mm	14.62 371	16.62 422	18.62 473	21.62 549	28 711	33.13 841	39.38 1001	45.12 1146	50.25 1276	55.38 1407
	H (open)	in. mm	10.43 265	10.43 265	10.63 270	14.57 370	18.7 475	22.44 570	24.8 630	30.31 770	31.3 795	32.44 824
	WT (kg)	RF BW	58 40	73 51	71 69	128 84	332 228	588 458	1023 713	1528 1148	1852 1388	2058 1542
Class 2500	L (BW)	in. mm	11 279	13 330	14.5 368	18 457	24 610	30 762	36 914	41 1041	-	-
	L1 (RF)	in. mm	17.75 451	20 508	22.75 578	26.5 673	36 914	40.25 1022	50 1270	56 1422	-	-
	L2 (RTJ)	in. mm	17.87 454	20.25 514	23 584	26.88 683	36.5 927	40.87 1038	50.88 1292	56.88 1444	-	-
	H (open)	in. mm	11.02 280	12 305	12.2 310	14.57 370	19.1 485	21.42 544	27.95 710	31.5 800	-	-
	WT (kg)	RF BW	86 52	113 88	133 93	213 158	548 383	988 638	1598 1198	2298 1723	-	-

Class 150/300/600 Forged steel swing check valve

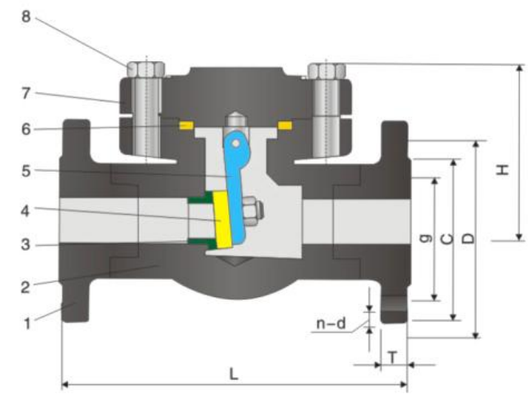

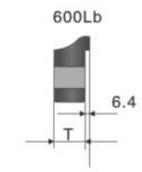

Main Parts and Materials

No	Parts	Material
1	Flange	A105
2	Body	A105
3	Seat	13Cr
4	Disc	13Cr
5	Rocker	13Cr
6	Gasket	SS304+Graphite
7	Bonnet	A105
8	Bolt	A193-B7

Technical Specification

1、Design and manufacture: API 602, BS 5352
2、Construction feature: Bolted cover or welded cover. Also available pressure seal cover for high pressure application.
3、Face to face dimensions: ANSI B 16.10
4、Flanged connection: ANSI B16.5.
5、Test and inspection: API 598.
6、Available LF2, F5, F9, F11, F22, F304(L), F316(L), aluminium bronze, inconel, monel etc for body material. And trim can be customized upon request.

Main Dimensions & Weights

DN		Class	L	D	C	g	T	n-d	H(Open)		WT(Kg)	
Inch	mm								Reduced Bore	Full Bore	Reduced Bore	Full Bore
1/2"	15	150	108	90	60.5	35	11.5	4-16	61	61	4.5	6.9
		300	140	95	66.5		14.5	4-16			4.8	7.7
		600	165	95	66.5		14.5	4-16			5.6	7.8
3/4"	20	150	117	100	70	43	13	4-16	61	78	6.9	9.8
		300	152	115	82.5		16	4-19			7.7	11.3
		600	190	115	82.5		16	4-19			7.8	12.5
1"	25	150	127	110	79.5	51	14.5	4-16	78	84	9.8	13.5
		300	216	125	89		18	4-19			11	16.8
		600	216	125	89		18	4-19			12.5	17.5
1 1/4"	32	150	140	119	89	63	16	4-16	84	101	13.5	19.5
		300	229	135	98.5		19.5	4-19			16.8	21.2
		600	229	135	98.5		21	4-19			17	23.5
1 1/2"	40	150	165	125	98.5	73	18	4-16	101	120	19.5	28.5
		300	241	155	114.5		21	4-22.5			21.2	32.6
		600	241	155	114.5		22.5	4-22.5			23.5	38.5
2"	50	150	203	150	120.5	92	19.5	4-19	120	133	28	30.3
		300	267	165	127		22.5	8-19			32.6	35
		600	292	165	127		26	8-19			38.8	42.2

Class 800 Forged steel swing check valve

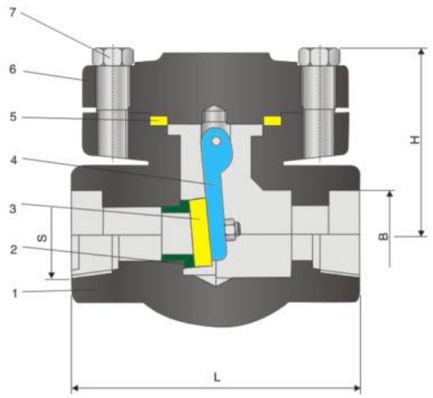

Main Parts and Materials

No	Parts	Material
1	Body	A105
2	Seat	13Cr
3	Disc	13Cr
4	Rocker	13Cr
5	Gasket	SS304+Graphite
6	Bonnet	A105
7	Bolt	A193-B7

Technical Specification

1、Design and manufacture: API 602, BS 5352
2、Construction feature: Bolted cover or welded cover. Also available pressure seal cover for high pressure application.
3、FNPT connection: ANSI B1.20.1
Socket weld connection: ANSI B 16.11
4、Test and inspection: API 598.
5、Available LF2, F5, F9, F11, F22, F304(L), F316(L), aluminium bronze, inconel, monel etc for body material. And trim can be customized upon request.

NOTE: For pressure class 900, 1500, 2500, please contact us for dimension and weight.

Main Dimensions & Weights

DN				L	B(SW)				S(Screwed)				H(open)	WT(kg)
inch		mm			ANSI		JIS		ANSI		ISO、BS、JIS			
									NPT 600		RC or PT 550			
Reduced Bore	Full Bore	Reduced Bore	Full Bore		Reduced Bore	Full Bore	Reduced Bore	Full Bore	Reduced Bore	Full Bore	Reduced Bore	Full Bore		
1/2"	–	15	–	80	21.8	–	22.2	–	1/2"	–	1/2"	–	61	1.0
3/4"	1/2"	20	15	92	27.1	21.8	27.7	22.2	3/4"	1/2"	3/4"	1/2"	61	1.1
1"	3/4"	25	20	111	33.8	27.1	34.5	27.7	1"	3/4"	1"	3/4"	78	1.9
1 1/4"	1"	32	25	120	42.6	33.8	43.2	34.5	1 1/4"	1"	1 1/4	1"	94	3.4
1 1/2"	1 1/4"	40	32	120	48.7	42.6	49.1	43.2	1 1/2"	1 1/4"	1 1/2"	1 1/4"	101	4.5
2"	1 1/2"	50	40	140	61.1	48.7	61.1	49.1	2"	1 1/2"	2"	1 1/2"	120	7.3
–	2"	–	50	170	–	61.1	–	61.1	–	2"	–	2"	133	10

Class 150/300/600 Forged steel flanged lifting check valve

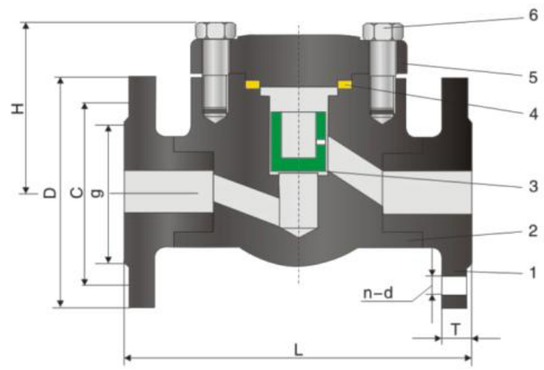

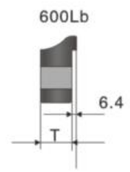

Main Parts and Materials

No	Parts	Material
1	Flange	A105
2	Body	A105
3	Disc	13Cr
4	Gasket	SS304+Graphite
5	Bonnet	A105
7	Bolt	A193-B7

Technical Specification

1、Design and manufacture: API 602, BS 5352
2、Construction feature: Bolted cover or welded cover. Also available pressure seal cover for high pressure application.
3、Face to face dimensions: ANSI B 16.10
4、Flanged connection: ANSI B16.5
5、Test and inspection: API 598
6、Available LF2, F5, F9, F11, F22, F304(L), F316(L), aluminium bronze, inconel, monel etc for body material. And trim can be customized upon request.

Main Dimensions & Weights

DN		Class	L	D	C	g	T	n-d	H(Open)		WT(Kg)	
Inch	mm								Reduced Bore	Full Bore	Reduced Bore	Full Bore
1/2"	15	150	108	90	60.5	35	11.5	4-16	61	61	2.56	3.37
		300	152	95	66.5		14.5	4-16			2.73	3.65
		600	165	95	66.5		14.5	4-16			3.00	4.00
3/4"	20	150	117	100	70	43	13	4-16	61	78	3.37	4.37
		300	178	115	82.5		16	4-19			3.65	4.74
		600	190	115	82.5		16	4-19			4.00	5.83
1"	25	150	127	110	79.5	51	14.5	4-16	78	84	4.67	8.17
		300	203	125	89		18	4-19			4.74	8.77
		600	216	125	89		18	4-19			5.83	9.47
1 1/4"	32	150	140	115	89	63	16	4-16	84	101	8.17	8.94
		300	216	135	98.5		19.5	4-19			8.77	9.60
		600	229	133	98.5		21	4-19			9.47	10.1
1 1/2"	40	150	165	125	98.5	73	18	4-16	103	120	8.94	12.04
		300	229	155	114.5		21	4-22.5			9.60	13.70
		600	241	155	114.5		22.5	4-22.5			10.10	15.61
2"	50	150	207	150	120.5	92	19.5	4-19	118	133	12.64	14.3
		300	267	165	127		22.5	8-19			13.70	17.8
		600	292	165	127		26	8-19			15.61	24.6

Class 800 Forged steel lifting check valve

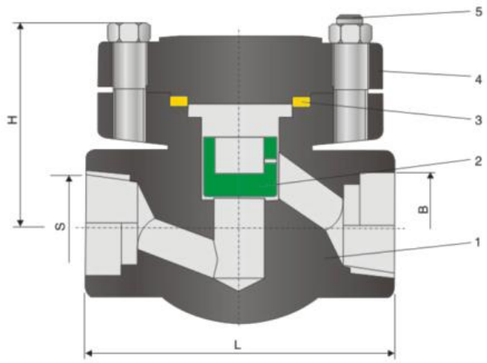

Main Parts and Materials

No	Parts	Material
1	Body	A105
2	Disc	13Cr
3	Gasket	SS304+Graphite
4	Bonnet	A105
6	Bolt	A193-B7

Technical Specification

1、Design and manufacture: API 602, BS 5352
2、Construction feature: Bolted cover or welded cover. Also available pressure seal cover for high pressure application.
3、FNPT connection: ANSI B1.20.1
Socket weld connection: ANSI B 16.11
4、Test and inspection: API 598
5、Available LF2, F5, F9, F11, F22, F304(L), F316(L), aluminium bronze, inconel, monel etc for body material. And trim can be customized upon request.

NOTE: For pressure class 900, 1500, 2500, please contact us for dimension and weight.

Main Dimensions & Weights

DN				L	B(SW)				S(Screwed)				H(open)	WT(kg)
inch		mm			ANSI		JIS		ANSI		ISO、BS、JIS			
									NPT 600		RC or PT 550			
Reduced Bore	Full Bore	Reduced Bore	Full Bore		Reduced Bore	Full Bore	Reduced Bore	Full Bore	Reduced Bore	Full Bore	Reduced Bore	Full Bore		
1/2"	–	15	–	80	21.8	–	22.2	–	1/2"	–	1/2"	–	61	1.2
3/4"	1/2"	20	15	92	27.1	21.8	27.7	22.2	3/4"	1/2"	3/4"	1/2"	61	1.4
1"	3/4"	25	20	111	33.8	27.1	34.5	27.7	1"	3/4"	1"	3/4"	78	2.3
1 1/4"	1"	32	25	120	42.6	33.8	43.2	34.5	1 1/4"	1"	1 1/4	1"	94	3.9
1 1/2"	1 1/4"	40	32	152	48.7	42.6	49.1	43.2	1 1/2"	1 1/4"	1 1/2"	1 1/4"	103	5.6
2"	1 1/2"	50	40	172	61.1	48.7	61.1	49.1	2"	1 1/2"	2"	1 1/2"	118	8.9
–	2"	–	50	200	–	61.1	–	61.1	–	2"	–	2"	132	12.5

Class 150~300 Wafer type single-disc swing check valve

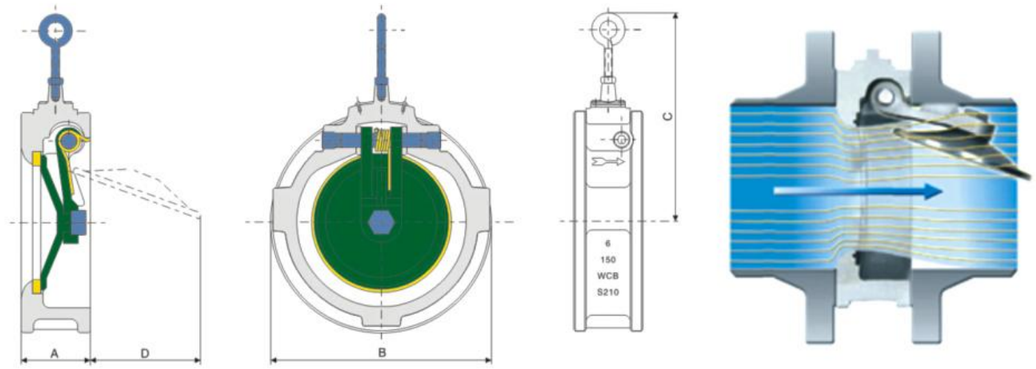

Main Parts and Materials

Parts	Material
Body	WCB, LCB, LCC, CF8, CF8M, CF3, CF3M
Disc	WCB, LCB, LCC, CF8, CF8M, CF3, CF3M
Seat	Cr13, 304, 316, Stellite or Integral on body
Spring	304, 316, 17-7PH, Inconel
Bolt	A193 B7 / B7M, ASTM A320 L7 L7M, ASTM A193 B8 / B8M

Technical Specification

1、Design and manufacture: API 594, API 6D, ASME B16.34
2、Consturction feature: single disc, swing type
3、End connection per ANSI B16.5 or ANSI B16.47
4、Test and inspection per API 598
5、Available Class 600~900, please contact for more information.

Dimensions & Weights Class 150

NPS	A(mm)		B(mm)	C(mm)	D(mm)	Weight(kg)	
	Short Type	Long Type				Short	Long
2	44	60	104	108	31	2.2	3
3	51	73	137	127	41	4.2	6.5
4	57	73	175	146	70	6.8	9.7
5	63	82	197	165	92	9	11.4
6	70	98	222	185	114	11.2	17
8	73	127	280	210	146	17	32.5
10	79	146	340	245	191	25	44
12	86	181	410	273	223	42	77
14	108	184	448	330	184	58	100
16	108	191	511	368	210	65	114
18	108	203	546	387	267	86	160
20	140	219	603	476	280	116	180
24	152	222	716	521	381	193	279

Dimensions & Weights Class 300

NPS	A(mm)		B(mm)	C(mm)	D(mm)	Weight(kg)	
	Short Type	Long Type				Short	Long
2	45	60	111	108	30	2	4.2
3	51	73	149	127	43	4	7.7
4	57	73	181	146	62	6	11.2
5	63	82	216	165	82	9.5	14
6	70	98	251	184	108	13	21.5
8	73	127	308	210	136	21	38
10	79	146	362	244	178	31	54
12	86	181	422	273	206	47	99
14	222	222	486	330	184	143	143
16	232	232	540	368	210	176	176
18	264	264	597	387	267	220	220
20	292	292	654	476	280	286	286
24	317.5	318	774	520	381	462	462

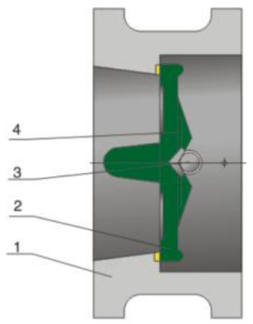

Dual plate check valve

Standards

1、Design and manufacture：API 594、API 6D；
2、Face to Face：API 594、API 6D；DIN 3202；
3、Pressure-temperature ratings：ASME B 1 6. 34；
4、Inspection and test：API 598、API 6D；
5、End flange dimension：ASME B16.5、ASME B16.47、API605、MSS SP-44、IS07005-1、DIN2543—2548、

Structure Features

1、It is short in face to face dimensions,being 1/4–1/8 times that of traditional flanged type check valve
2、It is impact in volume size and light in weight of about 1/4–1/20 times that of traditional flange type check valvc.
3、The disc closes quickly with less water hammer pressure.
4、It is convenient in installation,being available for use on level or ve~ical pipelines.
5、Flow passage is fluent with less flow resistance.
6、It acts sensitively with good sealing effect.
7、Disc travel is short with less impact force caused by valve closing.
8、It is impact in intcgral structure with nice outline view.
9、It is longer for service life with high reliability.

Materials for Main Parts

Part Name		Material							
1	Body	A216WCB	A352LCB	A217WC6	A217WC9	A217C5	A217C12	A351CF8	A351CF8M
2	Disc	A351CF8	A351CF8	A217WC6	A217WC9	A217C5	A217C12	A351CF8	A351CF8M
4	Stem	A182F6a	A182F304	A182F304	A182F304	A182F304	A182F304	A182F304	A182F316
3	Spring	Stainles steel/Inconel							

Noted：The chart above only lists out some common composition of wafer type steel swing check valve pans We may provide other different parts material composition according to the customer's request or the actual valve working condition

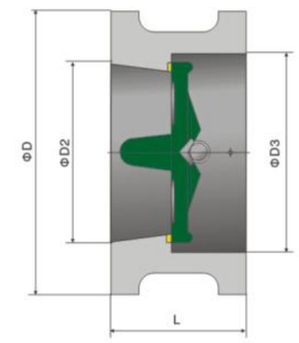

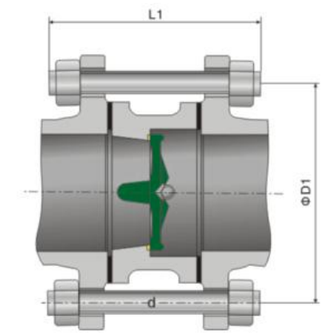

Main Dimensions & Weights

Class	Size		Dimensions(mm)				Weight (kg)	Pipeline flanges					
	NPS	DN	L	D	D2	D3		D1	Number of bolts	d		L1	
										In	mm	RF	RTJ
150	2	50	60	103	51	56	2	120.5	4	5/8	M16	140	155
	2 1/2	65	67	122	65	73	3	139.5	4	5/8	M16	150	165
	3	80	73	135	80	88	4	152.5	4	5/8	M16	160	175
	4	100	73	173	102	108	6	190.5	4	5/8	M16	170	185
	5	125	86	195	127	132	8	216.0	8	3/4	M20	190	205
	6	150	98	220	152	160	13	241.5	8	3/4	M20	205	220
	8	200	127	277	203	210	25	298.5	8	3/4	M20	240	255
	10	250	146	337	254	266	39	362.0	12	7/8	M24	270	285
	12	300	181	407	305	310	54	432.0	12	7/8	M24	310	325
	14	350	184	448	350	355	80	476.0	12	1	M27	325	340
	16	400	191	512	400	405	117	540.0	16	1	M27	340	355
	18	450	203	547	450	455	138	578.0	16	11/8	M30	365	380
	20	500	219	604	500	505	163	635.0	20	11/8	M30	385	400
	24	600	222	715	600	605	331	749.5	20	11/4	M33	405	420
	28	700	305	773	700	700	380	795.5	40	3/4	M20	455	–
	30	750	305	824	746	750	425	846.0	44	3/4	M20	455	–
	32	800	305	878	796	800	560	900.0	48	3/4	M20	460	–
	36	900	368	983	898	910	640	1009.5	44	7/8	M24	540	–
	42	1050	432	1142	1050	1055	960	1171.5	48	1	M27	625	–
	48	1200	524	1302	1200	1205	1400	1335.0	44	11/8	M30	740	–
300	2	50	60	110	51	58	3	127.0	8	5/8	M16	155	175
	2 1/2	65	67	128	65	73	4	149.0	8	3/4	M20	175	195
	3	80	73	147	80	88	6	168.5	8	3/4	M20	190	210
	4	100	73	179	102	108	8	200.0	8	3/4	M20	195	215
	5	125	86	214	127	132	15	235.0	8	3/4	M20	215	235
	6	150	98	249	152	16 0	18	270.0	12	3/4	M20	230	250
	8	200	127	305	203	210	31	330.0	12	7/8	M24	280	300
	10	250	146	359	254	266	51	387.5	16	1	M27	315	335
	12	300	181	420	305	310	77	451.0	16	11/8	M30	365	385
	14	350	222	483	350	355	117	514.5	20	11/8	M30	410	430
	16	400	232	537	400	405	190	571.5	20	11/4	M33	435	455
	18	450	264	594	450	455	200	628.5	24	11/4	M33	475	495
	20	500	292	652	500	505	265	686.0	24	11/4	M33	510	535
	24	600	318	772	600	608	410	813.0	24	11/2	M39	560	585
	30	750	368	882	735	740	660	921.0	36	13/8	M36	650	–
	36	900	483	1044	873	880	1020	1089.0	32	15/8	M42	800	–
	42	1050	568	1196	1035	1045	1540	1244.5	36	13/4	M45	920	–
	48	1200	629	1365	1179	1190	2260	1416.0	40	17/8	M48	1010	–

Main Dimensions and Weights

Class	Size		Dimensions(mm)				Weight (kg)	Pipeline flanges					
	NPS	DN	L	D	D2	D3		D1	Number of bolts	d		L1	
										In	Mm	RF	RTJ
600	2	50	60	110	51	58	4	127.0	8	5/8	M16	175	180
	2 1/2	65	67	128	65	73	5	149.0	8	3/4	M20	195	200
	3	80	73	147	80	88	8	168.5	8	3/4	M20	210	215
	4	100	79	191	102	108	11	216.0	8	7/8	M24	235	240
	5	125	105	239	127	136	20	267.0	8	1	M27	280	285
	6	150	136	264	152	162	26	292.0	12	1	M27	320	325
	8	200	165	318	200	212	55	349.0	12	11/8	M30	370	375
	10	250	213	398	250	266	95	432.0	16	11/4	M33	440	445
	12	300	229	455	305	312	140	489.0	20	11/4	M33	460	465
	14	350	273	490	337	355	223	527.0	20	13/8	M36	520	525
	16	400	305	562	387	400	360	603.0	20	11/2	M39	575	580
	18	450	362	610	438	450	395	654.0	20	15/8	M42	650	655
	20	500	368	680	489	500	18	724.0	24	15/8	M42	670	680
	24	600	438	786	591	600	836	838.0	24	17/8	M48	780	790
900	2	50	70	140	51	58	8	165.0	8	7/8	M24	225	230
	2 1/2	65	83	162	65	73	11	190.5	8	1	M27	250	255
	3	80	83	165	80	90	14	190.5	8	7/8	M24	240	245
	4	100	102	204	102	108	20	235.0	8	11/8	M30	285	290
	5	125	110	245	127	136	30	279.5	8	11/4	M33	310	315
	6	150	159	286	150	16 2	42	317.5	12	11/8	M30	365	370
	8	200	206	356	200	212	84	393.5	12	13/8	M36	440	445
	10	250	241	432	250	266	145	470.0	16	13/8	M36	490	495
	12	300	292	495	305	312	220	533.5	20	13/8	M36	560	565
	14	350	356	518	337	355	350	559.0	20	11/2	M39	645	655
	16	400	384	572	387	400	470	616.0	20	15/8	M42	685	695
	18	450	451	635	438	450	605	686.0	20	17/8	M48	790	805
	20	500	451	695	487	496	820	749.5	20	2	M52	810	825
	24	600	495	835	591	600	1050	901.5	20	21/2	M64	945	965
1500	2	50	70	140	51	58	8	165.0	8	7/8	M24	225	230
	2 1/2	65	83	162	65	73	11	190.5	8	1	M27	250	255
	3	80	83	172	80	90	19	203.0	8	11/8	M30	270	275
	4	100	102	207	102	108	26	241.5	8	11/4	M33	310	315
	5	125	110	252	127	136	51	292.0	8	11/2	M39	370	375
	6	150	159	280	150	162	68	317.5	12	13/8	M36	430	440
	8	200	206	350	200	212	130	393.5	12	15/8	M42	510	520
	10	250	248	433	254	266	210	482.5	12	17/8	M48	600	610
	12	300	305	518	305	312	384	571.5	16	2	M52	695	715
	14	350	356	576	337	355	550	635.0	16	21/4	M56	775	800
	16	400	384	639	387	400	635	705.0	16	11/2	M64	850	880
2500	2	50	70	143	42	48	10	171.5	8	1	M27	255	260
	2 1/2	65	83	166	52	58	18	197.0	8	11/8	M30	290	305
	3	80	86	194	62	68	26	228.5	8	11/4	M33	320	330
	4	100	105	232	88	94	40	273.0	8	11/2	M39	370	380
	5	125	110	277	100	106	59	324.0	8	13/4	M45	420	435
	6	150	159	315	150	162	90	368.5	8	2	M52	515	530
	8	200	206	385	180	186	150	438.0	12	2	M52	600	620
	10	250	254	474	225	232	240	539.5	12	21/2	M64	750	775
	12	300	305	547	266	272	440	619.0	12	23/4	M70	855	885

Ball Valve Series

Standards

Face–to–Face dimension: ASME B 16.10 JIS B2002
Design and manufacture: API 608, BS 5351, API 6D
Flanged End: ASME B16.5, JIS B2212, B2214
Shell Wall Thickness: BS 5351
Valve Test: API 598, JIS B2003
Pressure–Temperature Rating: JIS B2071, B2081

The body material is also available LCB, A351 CF8, CF8M, CF3, CF3M, duplex stainless steel etc. The trim/seat material can be customized upon request.

Material List

No	Parts	Material
1	Body	ASTM A216 Gr.WCB
2	Seat	PTFE
3	Ball	304 S.S.
4	Stem	ASTM A182 F6a
5	Gasket	PTFE
6	Spring	304 S.S.
7	Steel Ball	304 S.S.
8	Packing	PTFE
9	Packing Bushing	ASTM A276 410
10	Nut	ASTM A193 Gr.B7
11	Retaining Ring	304 S.S.
12	Lever	ASTM A216 Gr.WCB
13	Gauge Block	AISI 1010 Zinc–coated
14	Packing Gland	ASTM A216 Gr.WCB
15	Body Gasket	PTFE
16	Bonnet	ASTM A216 Gr.WCB
17	Stud	ASTM A193 Gr.B7
18	Nut	ASTM A194 Gr. 2H

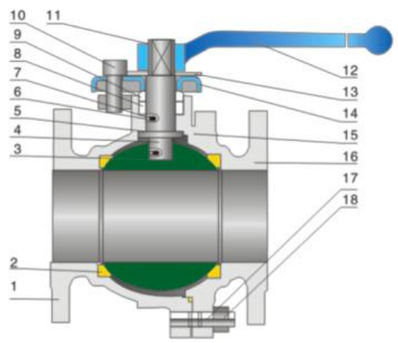

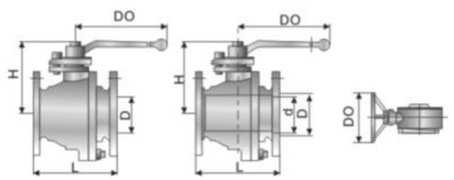

Full Port Reduced Port Gear Operator

Dimensions & Weights

Class 150/10K

Full bore	NPS(in)	1/2	3/4	1	1–1/2	2	3	4	6	8
	D(mm)	13	19	25	38	51	64	76	102	203
	L(mm)	108	117	127	165	178	203	229	394	457
	H(mm)	61	66	76	95	142	156	181	270	345
	Do(mm)	130	130	160	230	400	400	700	300*	300*
	WT(kg)	2.4	3.3	4.8	8.2	15.6	19.8	32.0	94.0	162.0
Reduced bore	NPS(in)	3/4*1/2	1*3/4	1–1/2*1	2*1–1/2	3*2	4*3	6*4	8*6	10*8
	L(mm)	117	127	165	178	203	229	267	292	330
	D(mm)	19	25	38	63	76	102	152	203	254
	H(mm)	82	85	100	120	153	162	191	290	340
	Do(mm)	130	130	160	230	400	400	460	300*	300*
	d(mm)	13	19	25	51	63	76	105	152	203
	WT(kg)	2.6	4.5	6.0	14.6	19.0	32.5	58.0	117.0	160.0

Class 300/20K

Full bore	NPS(in)	1/2	3/4	1	1–1/2	2	3	4	6	8
	D(mm)	13	19	25	38	51	64	76	102	203
	L(mm)	140	152	165	190	216	282	305	403	419
	H(mm)	62	68	80	100	148	162	188	283	360
	Do(mm)	150	150	180	250	400	400	700	300*	400*
	WT(kg)	3.0	3.5	6.2	11.0	25.0	40.0	57.5	128.0	252.0
Reduced bore	NPS(in)	3/4*1/2	1*3/4	1–1/2*1	2*1–1/2	3*2	4*3	6*4	8*6	––
	L(mm)	152	165	190	216	282	305	403	419	––
	D(mm)	19	25	38	63	76	102	152	203	––
	H(mm)	82	85	100	120	153	162	191	290	––
	Do(mm)	130	130	160	230	400	400	460	300*	––
	d(mm)	13	19	25	50	63	76	102	152	––
	WT(kg)	3.5	5.5	10.0	23.5	29.0	55.0	80.0	162.0	––

Material List

No	Parts	Material
1	Body	ASTM A105
2	Gasket	PTFE
3	Seat	R–PTFE
4	Ball	304 S.S.
5	Steel Ball	304 S.S.
6	Anti–static Spring	304 S.S.
7	Stem	ASTM A182 F6a
8	Gasket	PTFE
9	Packing	PTFE
10	Nameplate	SS304
11	Position Pin	ASTM 1045
12	Nut	ASTM A194 Gr. 2H
13	Lever	ASTM A216 Gr.WCB
14	Gauge Block	AISI 1010 Zinc–coated
15	Bushing Gasket	ASTM 1045
16	Nut	ASTM A194 Gr. 2H
17	Gland	304 S.S.
18	Gland Bushing	ASTM A276 410
19	Bonnet	ASTM 1045
20	Nut	ASTM A194 Gr. 2H
21	Stud	ASTM A193 Gr.B7

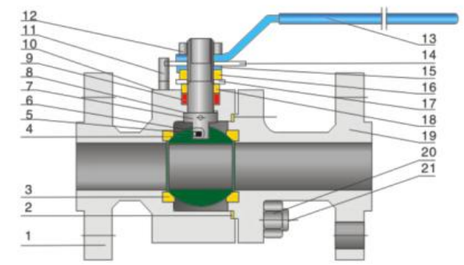

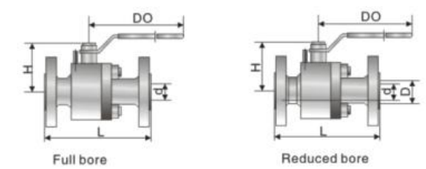

Full bore Reduced bore

The body material is also available LF2, A182 F304, F316, F304L, F316L, F51 etc. The trim/seat material can be customized upon request.

Dimensions & Weights

Class 600

Full bore	NPS(in)	1/2	3/4	1	1–1/2	2	3
	L(mm)	165	190	216	241	292	356
	D(mm)	13	19	25	38	51	76
	H(mm)	98	103	122	135	151	177
	Do(mm)	140	140	170	260	300	450
	WT(kg)	3.0	4.8	6.5	12.0	15.0	28.0
Reduced bore	NPS(in)	3/4*1/2	1*3/4	1–1/2*1	2*1–1/2	3*2	––
	L(mm)	190	216	241	292	356	––
	D(mm)	19	25	38	51	76	––
	H(mm)	98	103	122	135	151	––
	Do(mm)	140	140	170	260	300	––
	d(mm)	13	19	25	38	51	––
	WT(kg)	2.8	3.2	5.5	7.1	12.8	––

Class 900

Full bore	NPS(in)	1/2	3/4	1	1–1/2	2	3
	L(mm)	216	229	254	305	368	381
	D(mm)	13	19	25	38	51	76
	H(mm)	115	122	125	157	178	208
	Do(mm)	160	230	230	400	400	500
	(kg)	4.2	9.6	13.8	21.8	39.0	58.0
Reduced bore	NPS(in)	3/4*1/2	1*3/4	1–1/2*1	2*1–1/2	3*2	––
	L(mm)	229	254	305	368	381	––
	D(mm)	19	25	38	51	76	––
	H(mm)	115	122	125	157	178	––
	Do(mm)	160	230	230	400	400	––
	d(mm)	13	19	25	38	51	––
	WT(kg)	5.6	6.8	12.0	16.5	24.0	––

General

Trunnion mounted ball valves are designed in accordance with API 6D for classes ASME Class 150,300,600,900,1500,and 2500,Tow-piece split body cast steel and Three-piece forged steel side entry design bolted connections between body and closure,trunnion bolted connection, body thickness comply with ANSI B16.34.Seat ring is floating type,springloaded to assure the contact with ball in order to provide an effective tight seal even at low differential pressure between cavity and downstream closure. Standard design is soft seated,Adifferent soft seat materials are available based on the customer working condition.Available in Full and Reduced Bore.Electrical.pneumatic and hydraulic actuators are available based on customer requirement.Valves have been designed for use with various combinations of materials such as:Carbon Steel,Low Carbonsteel, special alloy,stainless steel,Monel,Inconel.

Stem Design/Anti Blowout

The stem is made separately from the ball,anti blow-up design with suitable PTFE and graphite rings, See Fig 1

Anti-Static Device

All flow control-floating flange ball valves include dual grounding systems from stem to ball and stem to body.Valve tesing to BS 5351 and BS 5146 wasperformed for all sizes,and witnessed by a third party inspection company.See fig.1

Emergency sealant injection

Trunnion type ball valves are fitted with emergency seals to restore sealing in case of soft seal damage.see fig.1 and fig.2

Body Joint Construction

Three pieces body end entry design,graphite ring or o-ring viton(or request)seal ensure absolute seal integrity.The bolted body designs include a tight tolerance overlapping metal fit between the body and the adapter to minimize any possibility of movement due to pipeline stress,High temperature spiral wound stainless seel/grafoil filled gasket is used for absolute seal.Body and adaptors are dimensioned for metal contact to ensure correct gasket crush.

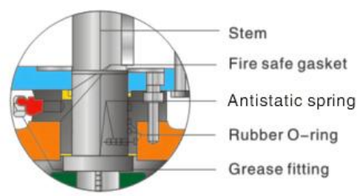

Fig.1

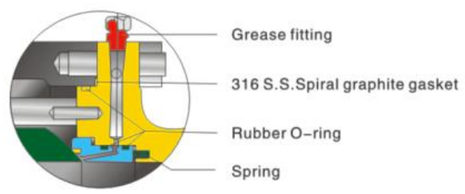

Fig.2

Double Block and Bleed

Ball valves can be equipped with drain valve which allows the block and bleed feature when the pressure is simultaneously applied to both sides of the ball,the medium can be relieved through the drain valve.Standard design of trunnion mounted ball valves assure that each seat ring performs the "single piston action"

Fig.3 shows pressure A<A1.the contact between ball and seat ring assured.
Fig.4 shows pressure B>B1.the self relieving action allows that valve seat will move slightly away from the ball surface,so any over pressure acting in the body cavity is discharged on the line to restore the balance between the body cavity and line

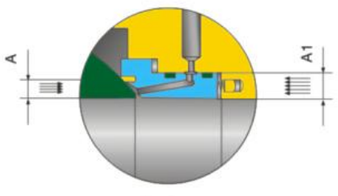

Fig.3

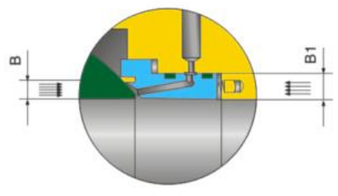

Fig.4

Top Flange

Top flange surface are machined and drilled, ready for mounting actuator.

Fire Safe

All fire-safe valves conform to API 607 and API 6FAstandards.

Features Two-piece Body

Valve is designed in accordance with the requirements of API 6D for pipeline service. Antistatic and anti blow-out stem design.
Seat design gives perfect tightness and is available as either self-relieving type or double piston effect type.
Design minimizes friction leading to low operating torque.
Available as double block and bleed device,which allows for venting and draining of ling fluid from the body cavity.
Full and Reduced bore Available.
Ball valves fire safe tested according to BS EN 12266-2.API 6FA and API 607.
Electric, pneumatic and hydraulic actuators are available based on customer's requirement.

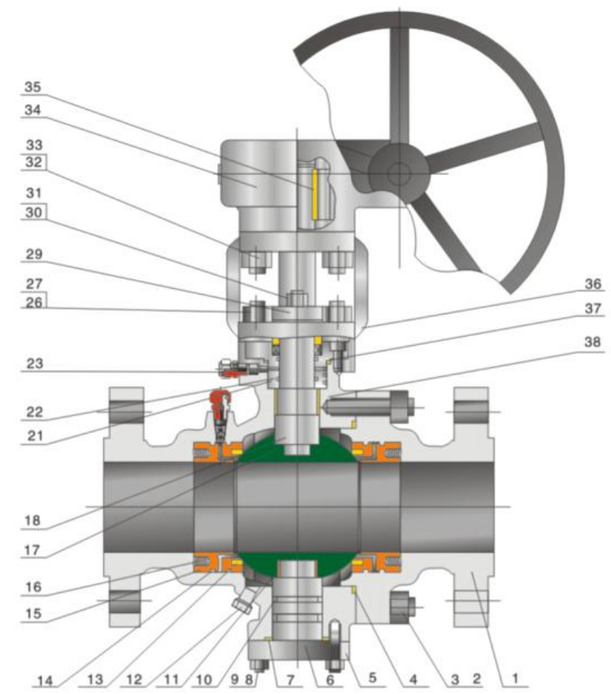

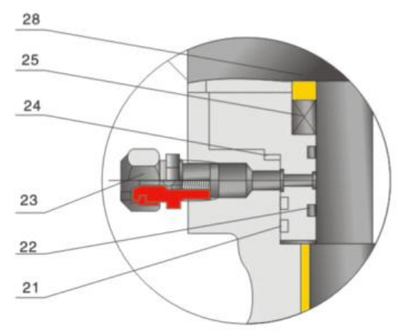

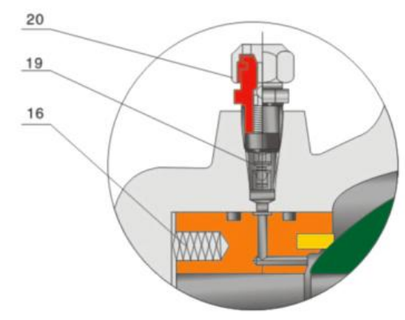

Material Specifications

No	Parts	Standard	Stainless Steel	Sour Service	Low Temperature Service
1	Body	ASTM A216 WCB	ASTM A351 CF8M	ASTM A216 WCB	ASTM A352 LCB
2	Body stud	ASTM A193 B7	ASTM A193 B8	ASTM A193 B7M	ASTM A320 L7M
3	Body Nut	ASTM A194 2H	ASTM A194 8	ASTM A194 2HM	ASTM A194 7M
4	Body Gasket	316ss+Graphite	316ss+Graphite	316ss+Graphite	316ss+Graphite
5	Low Cover	Carbon Steel	S.S.	Carbon Steel	Carbon Steel
6	Trunnion Support	ASTM A216 WCB/ENP	ASTM A216 WCB/ENP	ASTM A216 WCB/ENP	ASTM A216 WCB/ENP
7	Thrust Washer	316+PTFE+MoS2	316+PTFE+MoS2	316+PTFE+MoS2	316+PTFE+MoS2
8	Stud	ASTM A193 B7	ASTM A193 B8	ASTM A193 B7M	ASTM A320 L7M
9	Nut	ASTM A194 2H	ASTM A194 8	ASTM A194 2HM	ASTM A194 2M
10	O-Ring	NBR	NBR	NBR	NBR
11	Bearing	316+PTFE+MoS2	316+PTFE+MoS2	316+PTFE+MoS2	316+PTFE+MoS2
12	Drain Plug	Assembly	Assembly	Assembly	Assembly
13	Seat Insert	25% Glass-filled PTFE	25% Glass-filled PTFE	25% Glass-filled PTFE	25% Glass-filled PTFE
14	O-Ring	NBR	NBR	NBR	NBR
15	Seat	ASTM A105/ENP	ASTM A182 F316	ASTM A105/ENP	ASTM A350 LF2/ENP
16	Seat Spring	Inconel X-750	Inconel X-750	Inconel X-750	Inconel X-750
17	Ball	ASTM A 105/ENP	ASTM A182 F316	ASTM A105/ENP	ASTM A350 LF2/ENP
18	Stem	ASTM A182 F316	ASTM A182 F316	ASTM A182 F316	ASTM A182 F316
19	Seat Injection	Assembly	Assembly	Assembly	Assembly
20	Sealant Fitting	Assembly	Assembly	Assembly	Assembly
21	O-Ring	NBR	NBR	NBR	NBR
22	O-Ring	NBR	NBR	NBR	NBR
23	Sealant Fitting	Assembly	Assembly	Assembly	Assembly
24	Gasket	316ss+Graphite	316ss+Graphite	316ss+Graphite	316ss+Graphite
25	Packing	Graphite	Graphite	Graphite	Graphite
26	Stud	ASTM A193 B7	ASTM A193 B8	ASTM A193 B7M	ASTM A320 L7M
27	Nut	ASTM A194 2H	ASTM A194 8	ASTM A194 2HM	ASTM A194 7M
28	Gland	ASTM A182 F316	ASTM A182 F316	ASTM A182 F316	ASTM A182 F316
29	Gland Flange	ASTM A216 WCB	ASTM A351 CF8M	ASTM A216 WCB	ASTM A352 LCB
30	Stud	ASTM A193 B7	ASTM A193 B8	ASTM A193 B7M	ASTM A320 L7M
31	Nut	ASTM A 194 2H	ASTM A 194 8	ASTM A 194 2HM	ASTM A 194 7M
32	Stud	ASTM A193 B7	ASTM A193 B8	ASTM A193 B7M	ASTM A320 L7M
33	Nut	ASTM A194 2H	ASTM A194 8	ASTM A194 2HM	ASTM A194 7M
34	Worm	Assembly	Assembly	Assembly	Assembly
35	Key	Carbon Steel	S.S.	Carbon Steel	ASTM A182 F304
36	Yoke	ASTM A216 WCB	ASTM A351 CF8M	ASTM A216 WCB	ASTM A352 LCB
37	Bolt	Carbon Steel	S.S.	Carbon Steel	Carbon Steel
38	Bearing	316+PTFE+MoS2	316+PTFE+MoS2	316+PTFE+MoS2	316+PTFE+MoS2

The body material is also available A351 CF8, CF3,CF3M, duplex stainless steel etc. The trim/seat material can be customized upon request.

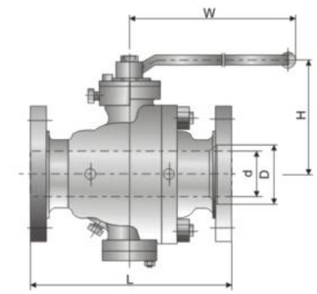

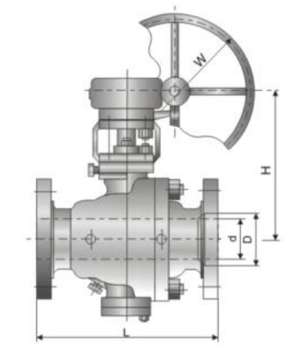

Full Bore (Class 150)

Size(in)	d(mm)	L(mm)	H(mm)	W(mm)	WT(kg)
2	51	178	165	230	17
3	76	203	193	400	33
4	102	229	231	460	50
6	152	394	390	1000	93
8	203	457	495	*500	166
10	254	533	505	*500	273
12	305	610	560	*500	475
14	337	686	600	*500	570
16	387	762	750	*500	778
18	438	864	845	*500	935
20	489	914	910	*500	1190
22	540	1016	1000	*500	1346
24	591	1067	1065	*500	1579

Reduce Bore (Class 150)

Size(in)	d(mm)	D(mm)	L(mm)	H(mm)	W(mm)	WT(kg)
3×2×3	51	76	203	165	230	30
4×3×4	76	102	229	193	400	47
6×4×6	102	152	394	231	400	90
8×6×8	152	203	457	390	460	161
10×8×10	203	254	533	495	1000	268
12×10×12	254	305	610	505	*500	467
14×12×14	305	337	686	560	*500	560
16×14×16	337	387	762	600	*500	766
18×16×18	387	438	864	750	*500	902
20×18×20	438	489	914	845	*500	1130
22×20×22	489	540	1016	910	*500	1300
24×22×24	540	591	1067	1000	*500	1520

Full Bore (Class 300)

Size(in)	d(mm)	L(mm)	H(mm)	W(mm)	WT(kg)
2	51	216	165	230	18
3	76	283	193	400	40
4	102	305	231	750	63
6	152	403	390	1000	150
8	203	502	495	1500	240
10	254	568	505	*500	305
12	305	648	560	*500	507
14	337	762	600	*500	602
16	387	838	750	*500	1000
18	438	914	845	*500	1160
20	489	991	910	*500	1320
22	540	1092	1000	*500	1540
24	591	1143	1065	*500	1874

Reduce Bore (Class 300)

Size(in)	d(mm)	D(mm)	L(mm)	H(mm)	W(mm)	WT(kg)
3×2×3	51	76	283	165	230	38
4×3×4	76	102	305	193	400	60
6×4×6	102	152	403	231	750	147
8×6×8	152	203	502	390	1000	234
10×8×10	203	254	568	495	1500	295
12×10×12	254	305	648	505	*500	488
14×12×14	305	337	762	560	*500	570
16×14×16	337	387	838	600	*500	910
18×16×18	387	438	914	750	*500	1020
20×18×20	438	489	991	845	*500	1280
22×20×22	489	540	1092	910	*500	1360
24×22×24	540	591	1143	1000	*500	1670

Class 600/900 Two-piece, split body, cast steel, side entry design

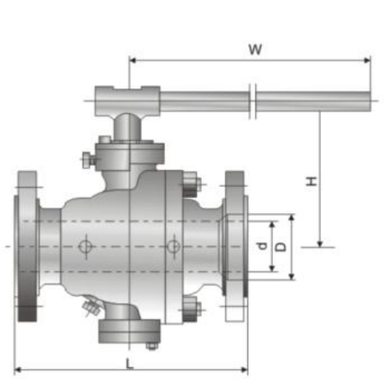

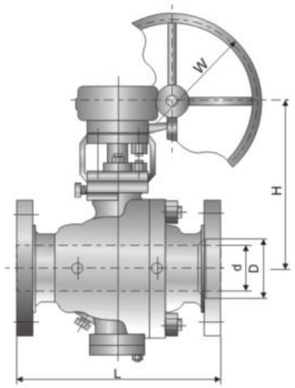

Full Bore (Class 600)

Size(in)	d(mm)	L(mm)	H(mm)	W(mm)	WT(kg)
2	51	292	176	400	27
3	76	356	247	750	50
4	102	432	335	1000	80
6	152	559	420	1500	220
8	203	660	430	*500	350
10	254	787	520	*500	600
12	305	838	665	*500	820
14	337	889	720	*500	1130
16	387	991	780	*500	1550
18	438	1092	950	*500	2100
20	489	1194	1010	*500	2800
24	591	1397	1120	*500	3626

Reduce Bore (Class 600)

Size(in)	d(mm)	D(mm)	L(mm)	H(mm)	W(mm)	WT(kg)
3×2×3	51	76	356	176	400	41
4×3×4	76	102	432	247	750	70
6×4×6	102	152	559	335	1000	122
8×6×8	152	203	660	420	1500	255
10×8×10	203	254	787	430	*500	440
12×10×12	254	305	838	520	*500	662
14×12×14	305	337	889	665	*500	1060
16×14×16	337	387	991	720	*500	1440
18×16×18	387	438	1092	780	*500	1860
20×18×20	438	489	1194	950	*500	2400
24×22×24	489	591	1397	1010	*500	3240

Full Bore (Class 900)

Size(in)	d(mm)	L(mm)	H(mm)	W(mm)	WT(kg)
2	51	368	192	460	52
3	76	381	279	1000	97
4	102	457	355	1500	138
6	152	610	385	*500	288
8	203	737	460	*500	448
10	254	838	600	*500	748
12	305	965	690	*500	1018
14	324	1029	785	*500	1398
16	375	1130	850	*500	1828
18	426	1219	915	*500	2328
20	473	1321	975	*610	2928
24	572	1549	1030	*610	4178

Reduce Bore (Class 900)

Size(in)	d(mm)	D(mm)	L(mm)	H(mm)	W(mm)	WT(kg)
3×2×3	51	76	381	192	460	83
4×3×4	76	102	457	279	1000	103
6×4×6	102	152	610	355	1500	201
8×6×8	152	203	737	385	*500	348
10×8×10	203	254	838	460	*500	598
12×10×12	254	305	965	600	*500	788
14×12×14	305	324	1029	690	*500	1100
16×14×16	324	375	1130	785	*500	1420
18×16×18	375	426	1219	850	*500	1928
20×18×20	426	473	1321	915	*500	2428
24×22×24	473	572	1549	975	610	3578

Three-piece, split body, forged steel, side entry design

Features Three-piece Body

Valve is designed in accordance with the requirements of API 6D for pipeline service.
Antistatic and anti blow-out stem design.
Seat design gives perfect tightness and is available as either self-relieving type or double piston effect type.
Design minimizes friction leading to low operating torque.
Available as double block and bleed device,which allows for venting and draining of ling fluid from the body cavity.
Full and Reduced bore Available.
Ball valves fire safe tested according to BS EN 12266-2.API 6FA and API 607.
Electric, pneumatic and hydraulic actuators are available based on customer's requirement.

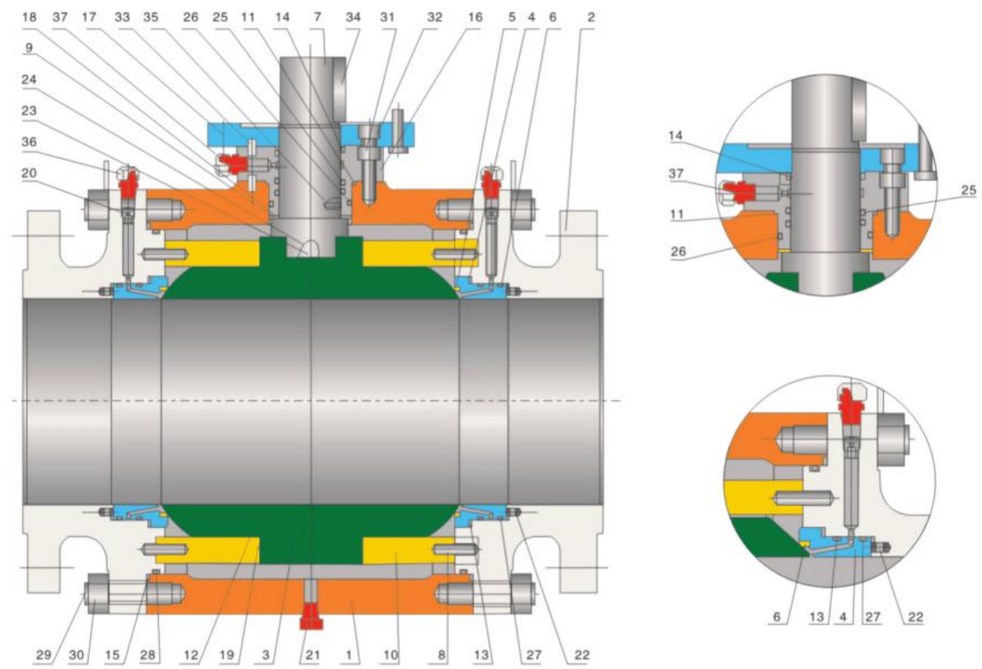

Material List

No	Parts	Standard	Stainless Steel	Sour Service	Low Temperature Service
1	Body	ASTM A105	ASTM A182 F316	ASTM A105	ASTM A350 LF2
2	Closure	ASTM A105	ASTM A182 F316	ASTM A105	ASTM A350 LF2
3	Ball	ASTM A105/ENP	ASTM A182 F316	ASTM A105/ENP	A350 LF2/ENP
4	Seat Assembly	Assembled	Assembly	Assembled	Assembled
5	Seat Insert	25% Glass-filled PTFE	25% Glass-filled PTFE	25% Glass-filled PTFE	25% Glass-filled PTFE
6	Seat Ring	ASTM A105/ENP	ASTM A182 F316	ASTM A105/ENP	A350 LF2/ENP
7	Stem	ASTM A182 F6a	ASTM A182 F316	ASTM A182 F316	ASTM A182 F316
8	Trunnion Alignment Pin	ASTM A182 F316	ASTM A182 F316	ASTM A182 F316	ASTM A182 F316
9	Shim	ASTM A182 F316	ASTM A182 F316	ASTM A182 F316	ASTM A182 F316
10	Trunnion Support	ASTM A105/ENP	ASTM A182 F316	ASTM A105/ENP	A350 LF2/ENP
11	Gasket	316 S.S.+Graphite	316 S.S.+Graphite	316 S.S.+Graphite	316 S.S.+Graphite
12	Gasket	316 S.S.+Graphite	316 S.S.+Graphite	316 S.S.+Graphite	316 S.S.+Graphite
13	Gasket	316 S.S.+Graphite	316 S.S.+Graphite	316 S.S.+Graphite	316 S.S.+Graphite
14	Spacer	PTFE	PTFE	PTFE	PTFE
15	Firesafe Gasket	316 S.S.+Graphite	316 S.S.+Graphite	316 S.S.+Graphite	316 S.S.+Graphite
16	Gland Cap	ASTM A 105	ASTM A 182 F316	ASTM A 105	ASTM A 350 LF2
17	Top Flange	ASTM A 105	ASTM A 182 F316	ASTM A 105	ASTM A 350 LF2
18	Thrust Washer	316 S.S.+PTFE+MoS2	316 S.S.+PTFE+MoS2	316 S.S.+PTFE+MoS2	316 S.S.+PTFE+MoS2
19	Bearing	316 S.S.+PTFE+MoS2	316 S.S.+PTFE+MoS2	316 S.S.+PTFE+MoS2	316 S.S.+PTFE+MoS2
20	Vent Valve	Assembly	Assembly	Assembly	Assembly
21	Drain	S.S.	S.S.	S.S.	S.S.
22	Seat Spring	Inconel X-750	Inconel X-750	Inconel X-750	Inconel X-750
23	Grounding Spring	S.S.	S.S.	S.S.	S.S.
24	Grounding Plunger	ASTM A 182 F316	ASTM A 182 F316	ASTM A 182 F316	ASTM A 182 F316
25	O-Ring	Viton	Viton	Viton	Viton
26	O-Ring	Viton	Viton	Viton	Viton
27	O-Ring	Viton	Viton	Viton	Viton
28	O-Ring	Viton	Viton	Viton	Viton
29	Body Stud	ASTM A193 B7	ASTM A193 B8	ASTM A193 B7M	ASTM A320 L7M
30	Body Nut	ASTM A194 2H	ASTM A194 8	ASTM A194 2HM	ASTM A194 7M
31	Screw	C.S.	S.S.	C.S.	ASTM A320 L7M
32	Screw	C.S.	S.S.	C.S.	ASTM A320 L7M
33	Gland Pin	C.S.	S.S.	C.S.	Carbon Steel
34	Key	C.S.	S.S.	C.S.	ASTM A182 L304
35	Spring Pin	C.S.	S.S.	C.S.	C.S.
36	Seat Injection	Assembly	Assembly	Assembly	Assembly
37	Stem Injection	Assembly	Assembly	Assembly	Assembly

The body material is also available A182 F304, F304L, F316L, F51, F53 etc. The trim/seat material can be customized upon request.

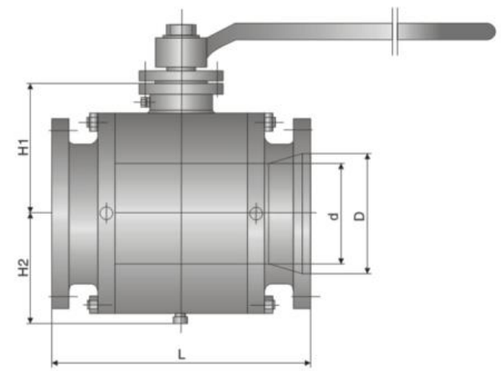

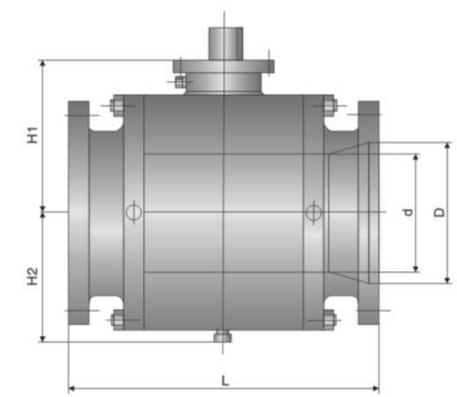

Full Port (Class 150)

Size(in)	d(mm)	L(mm)	H1(mm)	H2(mm)	WT(kg)
2	51	178	105	100	32
3	76	203	160	130	53
4	102	229	205	170	100
6	152	394	245	190	157
8	203	457	280	230	250
10	254	533	326	280	390
12	305	610	350	300	578
14	337	686	380	330	770
16	387	762	415	350	1100
18	438	864	440	400	1250
20	489	914	500	440	1800
22	540	991	520	470	2400
24	591	1067	585	530	3100
26	635	1143	630	570	3700
28	686	1244	645	650	4500
30	736	1295	700	700	5300
32	781	1371	740	750	6900
34	832	1473	770	780	8200
36	876	1524	820	800	9700
40	978	1753	900	900	13000
42	1022	1855	960	950	15000
48	1168	2134	1100	1100	23000

Reduced Port (Class 150)

Size(in)	d(mm)	D(mm)	L(mm)	H1(mm)	H2(mm)	WT(kg)
3×2×3	51	76	203	105	100	36
4×3×4	76	102	229	160	130	63
6×4×6	102	152	394	205	170	105
8×6×8	152	203	457	245	190	200
10×8×10	203	254	533	280	230	300
12×10×12	254	305	610	326	280	470
14×10×14	254	337	686	320	280	530
14×12×14	305	337	686	350	300	630
16×12×16	305	387	762	350	300	700
16×14×16	337	387	762	380	330	830
18×16×18	387	438	864	415	350	1100
20×16×20	387	489	914	415	350	1200
22×18×22	438	489	914	440	400	1300
24×20×24	489	591	1067	500	440	2100
30×24×30	635	736	1295	585	530	3400
36×30×36	781	876	1524	700	700	6400

Notes

1. Face-to-Face dimensions are according to API 6D
2. For 2" to 24" flanges are according to ASME B16.5
3. For over 24" flanges are according to ASME B16.47 series A.

Class 300/600 Three-piece, split body, forged steel, side entry design

Full Port (Class 300)

Size(in)	d(mm)	L(mm)	H1(mm)	H2(mm)	WT(kg)
2	51	216	105	100	31
3	76	282	160	130	58
4	102	305	205	170	110
6	152	403	245	190	180
8	203	502	280	230	280
10	254	568	326	280	410
12	305	648	350	300	760
14	337	762	380	330	1100
16	387	838	415	350	1600
18	438	914	440	400	1700
20	489	991	500	440	2300
22	540	1092	520	470	2900
24	591	1143	585	530	3500
26	635	1245	630	570	4900
28	686	1346	645	650	6000
30	736	1397	700	700	6800
32	781	1524	740	750	8000
34	832	1626	770	780	9100
36	876	1727	820	800	11000
40	978	1956	900	900	14000
42	1022	2083	960	950	17000
48	1168	2170	1100	1100	25000

Reduced Port (Class 300)

Size(in)	d(mm)	D(mm)	L(mm)	H1(mm)	H2(mm)	WT(kg)
3×2×3	51	76	283	105	100	34
4×3×4	76	102	305	160	130	70
6×4×6	102	152	403	205	170	120
8×6×8	152	203	502	245	190	220
10×8×10	203	254	568	280	230	320
12×10×12	254	305	648	326	280	600
14×10×14	254	337	762	320	280	660
14×12×14	305	337	762	350	300	850
16×12×16	305	387	838	350	300	1000
16×14×16	337	387	838	380	330	1200
18×16×18	387	438	914	415	350	1700
20×16×20	387	489	991	415	350	1700
22×18×22	438	489	991	440	400	1850
24×20×24	489	591	1143	500	440	2700
30×24×30	591	736	1397	585	530	4600
36×30×36	736	876	1727	700	700	8000

Notes

1.Face–to–Face dimensions are according to API 6D
2.For 2" to 24" flanges are according to ASME B16.5
3.For over 24" flanges are according to ASME B16.47 series A.

Full Port (Class 600)

Size(in)	d(mm)	L(mm)	H1(mm)	H2(mm)	WT(kg)
2	51	292	105	100	35
3	76	356	160	130	66
4	102	432	205	170	118
6	152	559	245	190	270
8	203	660	280	230	500
10	254	787	326	280	780
12	305	838	350	300	1100
14	337	889	380	330	1100
16	387	991	415	350	1600
18	438	1092	440	400	2160
20	489	1194	500	440	2700
22	540	1296	520	470	3900
24	591	1397	585	530	5000
26	635	1448	630	570	5700
28	686	1549	645	650	7000
30	736	1651	700	700	9000
32	781	1778	740	750	9800
34	832	1930	770	780	12000
36	876	2083	820	800	14000
40	978	2337	900	900	19000
42	1022	2437	960	950	22000
48	1168	2540	1100	1100	26000

Reduced Port (Class 600)

Size(in)	d(mm)	D(mm)	L(mm)	H1(mm)	H2(mm)	WT(kg)
3×2×3	51	76	356	105	100	42
4×3×4	76	102	432	160	130	90
6×4×6	102	152	559	205	170	160
8×6×8	152	203	660	245	190	300
10×8×10	203	254	787	280	230	560
12×10×12	254	305	838	326	280	820
14×10×14	254	337	889	320	280	920
14×12×14	305	337	889	350	300	1200
16×12×16	305	387	991	350	300	1400
16×14×16	337	387	991	380	330	1400
18×16×18	387	438	1092	415	350	1700
20×16×20	387	489	1194	415	350	2100
22×18×22	438	489	1194	440	400	2400
24×20×24	489	591	1397	500	440	3300
30×24×30	591	736	1651	585	530	5900
36×30×36	736	876	2083	700	700	11000

Notes

1.Face–to–Face dimensions are according to API 6D
2.For 2" to 24" flanges are according to ASME B16.5
3.For over 24" flanges are according to ASME B16.47 series A.

Class 900/1500/2500 Three-piece, split body, forged steel, side entry design

Full Port (Class 900)

Size(in)	d(mm)	L(mm)	H1(mm)	H2(mm)	WT(kg)
2	51	368	105	100	50
3	76	381	160	130	80
4	102	457	205	170	150
6	152	610	245	190	360
8	203	737	280	230	620
10	254	838	326	280	1100
12	305	965	350	300	1600
14	324	1029	380	330	1450
16	375	1130	415	350	2200
18	425	1219	440	400	2800
20	473	1321	500	440	4250
22	524	1422	520	470	6500
24	572	1549	585	530	7000
26	669	1651	630	570	8000
28	667	1753	645	650	9500
30	714	1880	700	700	12500
32	762	2032	740	750	12000
34	808	2159	770	780	18000

Reduced Port (Class 900)

Size(in)	d(mm)	D(mm)	L(mm)	H1(mm)	H2(mm)	WT(kg)
3×2×3	51	76	381	105	100	55
4×3×4	76	102	457	160	130	100
6×4×6	102	152	610	205	170	220
8×6×8	152	203	737	245	190	450
10×8×10	203	254	838	280	230	560
12×10×12	254	305	965	326	280	820
14×10×14	254	337	1029	320	280	920
14×12×14	305	337	1029	350	300	1200
16×12×16	305	387	1130	350	300	1400
16×14×16	324	387	1130	380	330	1400
18×16×18	375	438	1219	415	350	1700
20×16×20	375	489	1321	415	350	2100
22×18×22	425	489	1321	440	400	2400
24×20×24	473	591	1549	500	440	3300
30×24×30	572	736	1880	585	530	5900
36×30×36	714	876	2286	700	700	11000

Notes

1.Face–to–Face dimensions are according to API 6D
2.For 2" to 24" flanges are according to ASME B16.5
3.For over 24" flanges are according to ASME B16.47 series A.

Full Port (Class 1500)

Size(in)	d(mm)	L(mm)	H1(mm)	H2(mm)	WT(kg)
2	51	368	110	105	60
3	76	470	165	130	100
4	102	546	220	170	210
6	146	705	260	230	500
8	194	832	310	290	850
10	241	991	370	360	1600
12	289	1130	430	440	2300
14	317	1257	450	450	2950
16	362	1384	500	600	4200

Reduced Port (Class 1500)

Size(in)	d(mm)	D(mm)	L(mm)	H1(mm)	H2(mm)	WT(kg)
3×2×3	51	76	470	110	105	70
4×3×4	76	102	546	165	130	130
6×4×6	102	146	705	220	170	300
8×6×8	146	194	832	260	230	580
10×8×10	194	241	991	310	290	1100
12×10×12	241	289	1130	370	360	1800
14×10×14	241	317	1257	370	360	2200
14×12×14	289	317	1257	430	440	2600
16×12×16	289	362	1384	430	440	2900
16×14×16	317	362	1384	450	450	3300
18×16×18	362	407	1537	500	600	500
20×16×20	362	457	1664	500	600	5600

Full Port (Class 2500)

Size(in)	d(mm)	L(mm)	H1(mm)	H2(mm)	WT(kg)
2	44.5	451	120	130	100
3	63.5	578	180	200	200
4	89	673	230	250	390
6	133	914	260	250	790
8	181	1022	400	350	1400
10	226	1270	450	420	2200
12	267	1422	520	510	3400

Notes

1.Face–to–Face dimensions are according to API 6D
2.For 2" to 24" flanges are according to ASME B16.5

Reduced Port (Class 2500)

Size(in)	d(mm)	D(mm)	L(mm)	H1(mm)	H2(mm)	WT(kg)
3×2×3	44.5	63.5	578	120	130	170
4×3×4	63.5	89	673	180	200	280
6×4×6	89	133	914	260	250	520
8×6×8	133	181	1022	400	250	1100
10×8×10	181	226	1270	450	350	1700
12×10×12	226	267	1422	450	420	2600

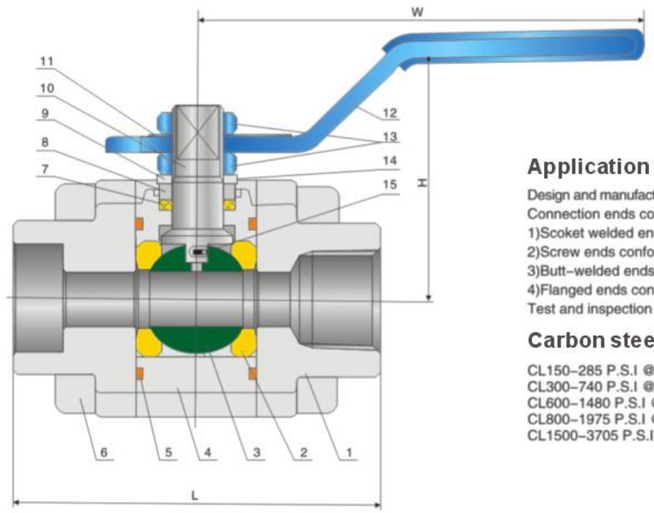

Application standards

Design and manufacture conform to BS 5351, MSS SP 118, JIS B2071, B2081;
Connection ends conform to :
1)Scoket welded ends conform to ANSI B 16.11
2)Screw ends conform to ANSI B1.20.1
3)Butt-welded ends conform to ANSI B-16.25
4)Flanged ends conform to ANSI B 16.5
Test and inspection conform to:API 598, GB/T 13927, JB /T9092, JIS B2003

Carbon steel temperature-pressure rate

CL150-285 P.S.I @ 100° F
CL300-740 P.S.I @ 100° F
CL600-1480 P.S.I @ 100° F
CL800-1975 P.S.I @ 100° F
CL1500-3705 P.S.I @ 100° F

Material List

No	Parts	Material				
1	Bonnet	A105	LF2	LF2	F316	F316
2	Seat	RPTFE & PEEK	RPTFE & PEEK	RPTFE & PEEK	RPTFE & PEEK	RPTFE & PEEK
3	Ball	F6	F304	F304(L)	F316(L)	F51
4	Body	A105	LF2	F304(L)	F316(L)	F51
5	O-ring	VITON	VITON	VITON	VITON	VITON
6	Stud	PTFE	B8	B8	B8M	B8M
7	Gasket	PTFE	PTFE	PTFE	PTFE	PTFE
8	Packing Bushing	410	PTFE	PTFE	PTFE	PTFE
9	Gland	410	304	F304(L)	F316(L)	F51
10	Stem	F6	304	F304(L)	F316(L)	F51
11	Nameplate	Al	Al	Al	Al	Al
12	Lever	1020+PVC	1020+PVC	1020+PVC	1020+PVC	1020+PVC
13	Nut	2H	8M	8M	8M	8M
14	Elastic Washer	65Mn	65Mn	304	304	304
15	Anti-static Spring	304	304	304	316L	316L

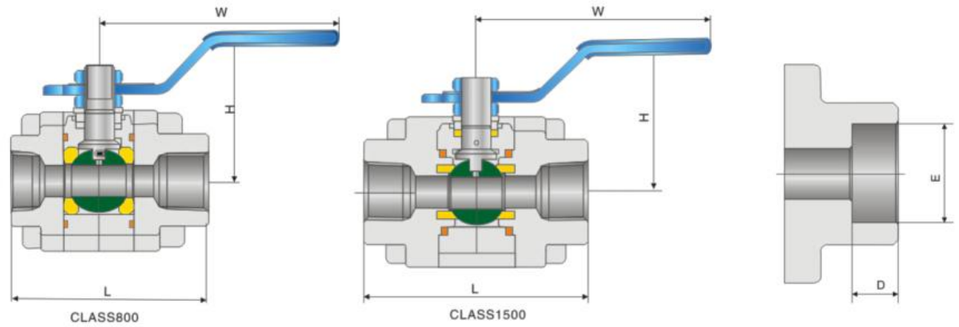

Full Bore Class 800/1500

inch		1/4	3/8	1/2	3/4	1	11/4	11/2	2
End to End(L=mm)	CLASS 800	67	67	73	88	105	116	128	146
	CLASS 1500	73	73	88	105	116	128	146	---
Lever(W=mm)	CLASS 800	120	120	120	145	145	175	175	260
	CLASS 1500	120	120	145	145	175	175	260	---
Center of Top(H=mm)	CLASS 800	50	50	52	60	65	86	93	110
	CLASS 1500	52	52	60	60	86	93	110	---
Inside Bore(D=mm)	CLASS 800	11	11	14	20.5	25	31.6	38	49
	CLASS 1500	11	11	14	20.5	25	31.6	38	---
WT(kg)	CLASS 800	0.75	0.75	0.95	1.7	2.4	3.7	4.9	8.7
	CLASS 1500	---	1.2	2.2	3.4	4.7	6.7	10.5	---

Reduced Bore Class 800/1500

inch		1/2	3/4	1	11/4	11/2	2
End to End(L=mm)	CLASS 800	67	73	88	105	116	128
	CLASS 1500	73	88	105	116	128	146
Lever(W=mm)	CLASS 800	120	120	145	145	175	175
	CLASS 1500	120	145	145	175	175	260
Center of Top(H=mm)	CLASS 800	50	52	60	65	86	93
	CLASS 1500	52	60	60	86	93	110
Inside Bore(D=mm)	CLASS 800	11	14	20.5	25	31.6	38
	CLASS 1500	11	14	20.5	25	31.6	38
Weight(kg)	CLASS 800	0.75	0.95	1.7	2.4	3.7	4.9
	CLASS 1500	1.2	2.2	3.4	4.7	6.7	10.5

SOCKET WELD DIMENSIONS		1/4	3/8	1/2	3/4	1	11/4	11/2	2
ANSI B 16.11	E(mm)	14.1	17.6	21.9	27.4	34.2	42.7	48.8	61.1
	D(mm)	9.6	9.6	9.6	12.7	12.7	12.7	12.7	15.9

WESDOM

www.wsdsolution.com
www.wsd-valve.com

Butterfly Valve Series

WESDOM GROUP

Features

Triple eccentric design reduces the friction between plate and seat, and increases the valve service life. Plate and seat oblique cone design turns the compression seal into torque seal, achieves bi–directional seals. Metals and non–metallic compound seal ring combines the rigidity of the metal, the wear–resistance and flexibility of the soft seat, ensures reliable seal and greater preformance. Low opening torque value

Technical Specification

- Working Pressure: CLASS 150~CLASS 900
- Working Temperature:
  - 304 Seat: –73~+450℃
  - 316 Seat: –73~+450℃
- Special seat: –268~+650℃
- Design and manufacture standard: API 609
- Flanged End: ASME B16.5 & ASME B16.47
- Face–to–Face dimension: API 609 & MSS SP–68
- Test and Inspection: API 598

Note: For other ends, please state in the order

Flow Features

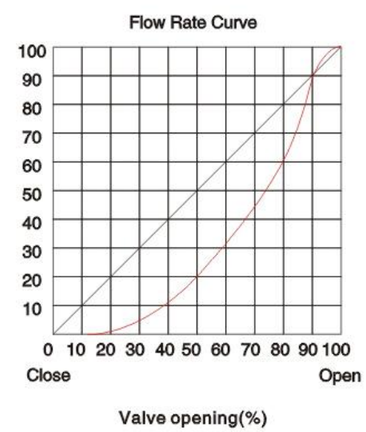

Opening Torque Value

NPS(mm)	Max. Differential Pressure △P(MPa)	
	2.0	5.0
2	168	252
2–1/2	239	360
3	276	410
4	372	550
5	592	960
6	672	1000
8	938	1400
10	1450	2160
12	3000	4500
14	3600	5400
16	4870	7200
18	7440	11160
20	14630	12800
24	20760	27680
28	31764	–
32	38724	–
36	47860	–
40	75600	–

Triple Eccentric Design Features

On the basis of double eccentric design, the centreline of the plate seal surface and seat centreline forms angle (γ°, and enables slight wedge effect when the plate contacts the) flexible metal seat, and slight move and radial deformaion of the seat ring along with the plate, average compression around the seat ring thus achieves complete sealing. This unique triple eccentric design fully applies Cam effect in the valve, greatly reduces the friction at the contact area, possiblity of leakage and also the opening torque value, increases longer service life, achieves easy and convenient operation.

Flow Rate

Cv value is calculated on the standard condition while the pressure on both sides falls below 0.007MPa

DN(mm)	2	2–1/2	3	4	5	6
Cv	102	102	242	423	423	1160
DN(mm)	8	10	12	14	16	18
Cv	2016	3066	4568	6325	8152	11023
DN(mm)	20	24	28	32	36	40
Cv	13780	20486	31586	35612	47860	71460

Class 150 Triple eccentric, metal to metal seat, wafer or flanged ends

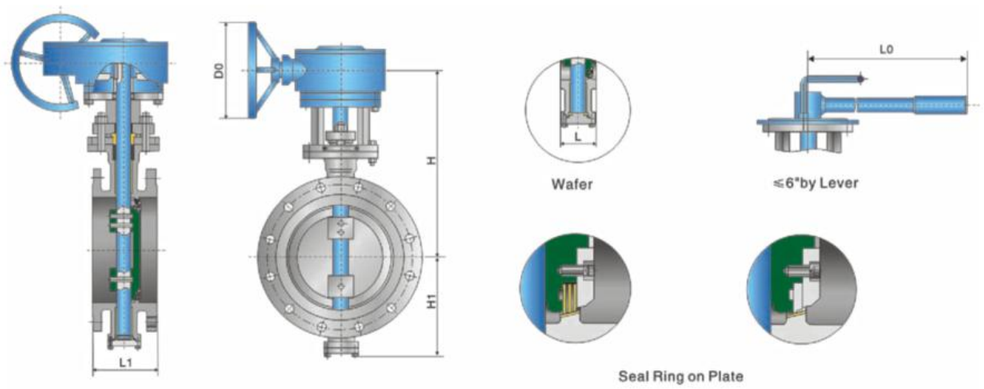

Main Parts and Materials

Parts	Material
Body	WCB, LCB, LCC, CF8, CF8M, CF3, CF3M
Seal Ring	304 / 316 / S31803 + Graphite / PTFE Laminated
Disc	WCB, LCB, LCC, CF8, CF8M, CF3, CF3M
Seal Surface	Cr13, 304, 316, Stellite or Integral on body
Stem	F6a, F304, 17–4PH, F51
Bushing	SF–1, 304 / 316 + PTFE, 304 / 316 + Nitrided
Thrust Washer	304 + Graphite or PTFE
Packing	Graphite or PTFE

Note:
≤6" operating by the Lever
Face–to–Face dimension: API 609 & MSS SP–68
Flanged End: ASME B16.5 & ASME B16.47
For other ends, please state in the order.

Note: for other body and internal parts material, we can produce according to customer's specification or request

Dimensions & Weights

NPS(in)	L(mm)	L1(mm)	H1(mm)	H(mm)	D0(mm)	L0(mm)	WT(Kg)		
							Wafer	Lug	Flange(Short Pattern)
2	43	108	110	135	–	150	10	11	20
3	48	114	125	155	–	180	11	13	29
4	54	127	147	162	–	200	13	16	33
6	57	140	166	240	–	300	26	28	74
8	64	152	215	375	180	–	36	43	86
10	71	165	238	396	180	–	53	64	142
12	81	178	283	446	180	–	74	86	167
14	92	190	302	472	315	–	110	127	218
16	102	216	338	555	350	–	138	159	275
18	114	222	381	605	400	–	180	211	315
20	127	229	408	638	480	–	196	225	395
24	154	267	495	738	480	–	400	462	580
28	165	292	561	976	480	–	560	655	657
30	190	318	590	1016	610	–	685	812	717
32	190	318	650	1160	610	–	726	868	880
36	203	330	700	1205	480	–	920	1056	1042
40	216	410	750	1294	480	–	1283	1470	1760
42	229	410	780	1350	480	–	1488	1723	1820
48	254	470	892	1523	480	–	1645	1895	2660

Class 300 Triple eccentric, metal to metal seat, wafer or flanged ends

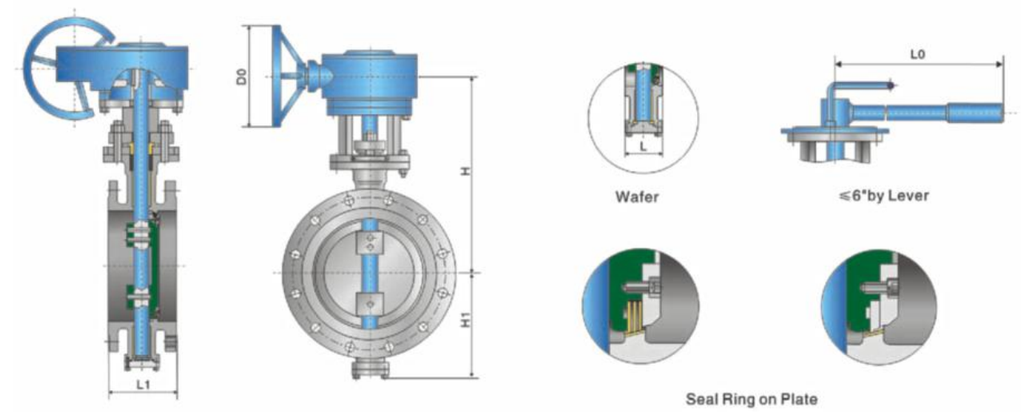

Main Parts and Materials

Parts	Material
Body	WCB, LCB, LCC, CF8, CF8M, CF3, CF3M
Seal Ring	304 / 316 / S31803 + Graphite / PTFE Laminated
Disc	WCB, LCB, LCC, CF8, CF8M, CF3, CF3M
Seal Surface	Cr13, 304, 316, Stellite or Integral on body
Stem	F6a, F304, 17–4PH, F51
Bushing	SF–1, 304 / 316 + PTFE, 304 / 316 + Nitrided
Thrust Washer	304 + Graphite or PTFE
Packing	Graphite or PTFE

Note:
≤6" operating by the Lever
Face–to–Face dimension: API 609 & MSS SP–68
Flanged End: ASME B16.5 & ASME B16.47
For other ends, please state in the order.

Note: for other body and internal parts material, we can produce according to customer's specification or request

Dimensions & Weights

NPS(in)	L(mm)	L1(mm)	H1(mm)	H(mm)	D0(mm)	L0(mm)	WT(Kg)		
							Wafer	Lug	Flange(Short Pattern)
3	48	180	125	155	–	180	13	15	29
4	54	190	147	162	–	200	18	21	35
6	59	210	166	240	–	300	29	33	81
8	73	230	215	375	180	–	38	42	94
10	83	250	238	396	180	–	58	63	156
12	92	270	283	446	180	–	91	86	183
14	117	290	302	472	315	–	121	131	239
16	133	310	338	555	350	–	153	165	302
18	149	330	381	605	400	–	197	211	346
20	159	350	408	638	480	–	215	238	434
24	181	390	495	738	480	–	443	465	638

Class 600 Triple eccentric, metal to metal seat, wafer or flanged ends

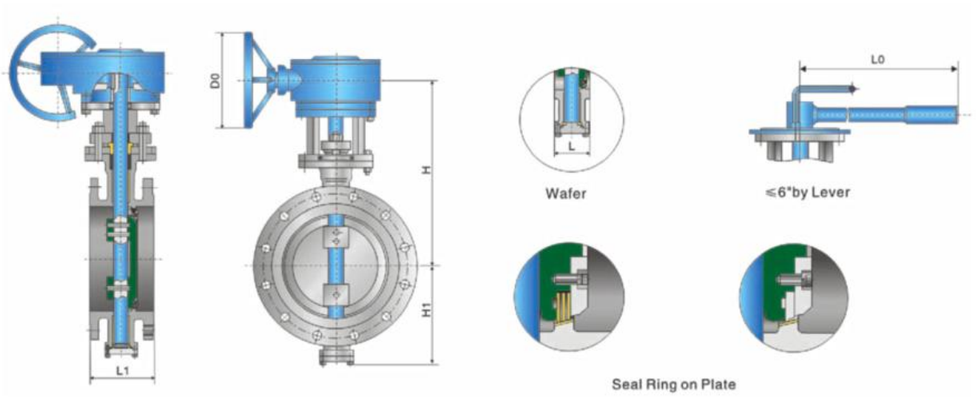

Main Parts and Materials

Parts	Material
Body	WCB, LCB, LCC, CF8, CF8M, CF3, CF3M
Seal Ring	304 / 316 / S31803 + Graphite / PTFE Laminated
Disc	WCB, LCB, LCC, CF8, CF8M, CF3, CF3M
Seal Surface	Cr13, 304, 316, Stellite or Integral on body
Stem	F6a, F304, 17–4PH, F51
Bushing	SF–1, 304 / 316 + PTFE, 304 / 316 + Nitrided
Thrust Washer	304 + Graphite or PTFE
Packing	Graphite or PTFE

Note:
≤6" operating by the Lever
Face–to–Face dimension: API 609 & MSS SP–68
Flanged End: ASME B16.5 & ASME B16.47
For other ends, please state in the order.

Note: for other body and internal parts material, we can produce according to customer's specification or request

Dimensions & Weights

NPS(In)	L(mm)	L1(mm)	H1(mm)	H(mm)	D0(mm)	L0(mm)	WT(Kg)		
							Wafer	Lug	Flange(Short Pattern)
3	180	54	170	414	–	250	25	28	56
4	190	64	185	447	–	300	39	42	86
5	200	78	205	480	–	300	65	72	110
6	210	78	216	495	315	–	93	98	143
8	230	102	265	536	406	–	135	165	235
10	250	117	315	641	406	–	242	284	366
12	270	140	362	727	508	–	267	394	487
14	290	155	390	757	508	–	448	508	655
16	310	178	440	825	610	–	505	599	855
18	330	200	460	840	762	–	642	856	992
20	350	216	526	978	812	–	800	1114	1390
24	390	232	623	1070	812	–	1305	1704	1910

Class 900 Triple eccentric, metal to metal seat, wafer or flanged ends

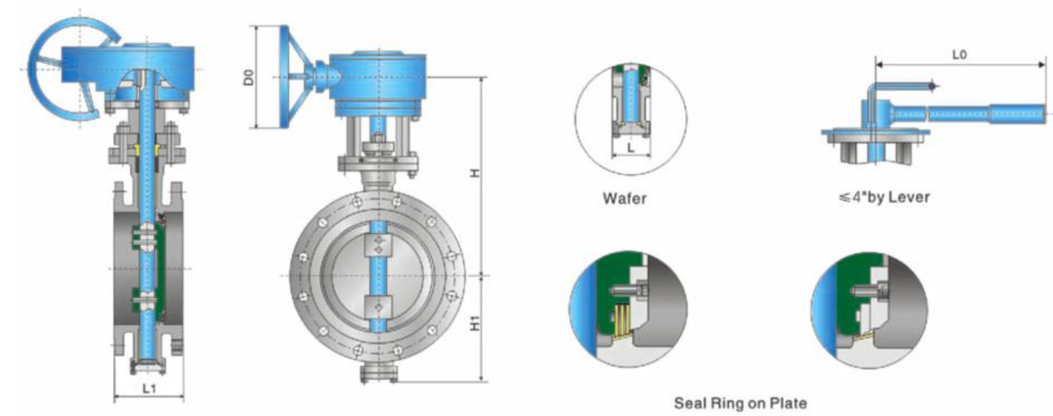

Main Parts and Materials

Parts	Material
Body	WCB, LCB, LCC, CF8, CF8M, CF3, CF3M
Seal Ring	304 / 316 / S31803 + Graphite / PTFE Laminated
Disc	WCB, LCB, LCC, CF8, CF8M, CF3, CF3M
Seal Surface	Cr13, 304, 316, Stellite or Integral on body
Stem	F6a, F304, 17–4PH, F51
Bushing	SF–1, 304 / 316 + PTFE, 304 / 316 + Nitrided
Thrust Washer	304 + Graphite or PTFE
Packing	Graphite or PTFE

Note:
≤4" operating by the Lever
Face–to–Face dimension: API 609 & MSS SP–68
Flanged End: ASME B16.5 & ASME B16.47
For other ends, please state in the order.

Note: for other body and internal parts material, we can produce according to customer's specification or request

Dimensions & Weights

NPS(In)	L(mm)	L1(mm)	H1(mm)	H(mm)	D0(mm)	L0(mm)	WT(Kg)		
							Wafer	Lug	Flange(Short Pattern)
4	229	92	197	459	–	300	–	–	–
5	267	102	220	495	508	–	–	–	–
6	267	102	236	515	508	–	–	125	180
8	292	140	290	561	610	–	–	260	295
10	330	155	343	669	711	–	–	327	460
12	356	178	394	759	762	–	–	490	630
14	381	290	428	795	812	–	–	670	810
16	406	310	482	867	812	–	–	888	1025
18	432	330	505	885	812	–	–	1053	1290
20	457	350	576	1028	914	–	–	1441	1795
24	508	350	678	1125	914	–	–	2238	2995

WESDOM

www.wsdsolution.com
www.wsd-valve.com

Carbon Steel Pipe Fittings

WESDOM GROUP

Wall thickness schedule **GB12459 GB/T13401**

Nominal diameter DN	Outside Diameter D		Nominal wall Thickness T														
	A series	B series	Sch5s	Sch10s	Sch20s	LG	Sch20	Sch30	STD	Sch40	Sch60	XS	Sch80	Sch100	Sch120	Sch140	Sch160
15	21.3	18	1.6	2.1	2.6	–	–	–	–	2.9	–	–	3.6	–	–	–	4.5
20	26.9	25	1.6	2.1	2.6	–	–	–	–	2.9	–	–	4.0	–	–	–	5.6
25	33.7	32	1.6	2.8	3.2	–	–	–	–	3.2	–	–	4.5	–	–	–	6.3
32	42.4	38	1.6	2.8	3.2	–	–	–	–	3.6	–	–	5.0	–	–	–	6.3
40	48.3	45	1.6	2.8	3.2	–	–	–	–	3.6	–	–	5.0	–	–	–	7.1
50	60.3	57	1.6	2.8	3.6	–	3.2	–	–	4.0	–	–	5.6	–	–	–	8.8
65	76.1(73)	76	2.0	3.0	3.6	–	4.5	–	–	5.0	–	–	7.1	–	–	–	10.0
80	88.9	89	2.0	3.0	4.0	–	4.5	–	–	5.6	–	–	8.0	–	–	–	11.0
90	101.6	–	2.0	3.0	4.0	–	4.5	–	–	5.6	–	–	8.0	–	–	–	12.5
100	114.3	108	2.0	3.0	4.0	–	5.0	–	–	5.9	–	–	8.8	–	11.0	–	14.2
125	139.7	133	2.9	3.4	5.0	–	5.0	–	–	6.3	–	–	10.0	–	12.5	–	16.0
150	168.3	159	2.9	3.4	5.0	–	5.6	–	–	7.1	–	–	11.0	–	14.2	–	17.5
200	219.1	219	2.9	4.0	6.3	–	6.3	7.1	–	8.0	10.0	–	12.5	16.0	17.5	20.0	22.2
250	273.0	273	3.6	4.0	6.3	–	6.3	8.0	–	8.8	12.5	–	16.0	17.5	22.2	25.0	28.0
300	323.9	325	4.0	4.5	6.3	–	6.3	8.8	–	10.0	14.2	–	17.5	22.2	25.0	28.0	32.0
350	355.6	377	4.0	5.0	8.0	8.0	8.0	10.0	10.0	11.0	16.0	13.0	20.0	25.8	28.0	32.0	36.0
400	406.4	426	4.0	5.0	8.0	8.0	8.0	10.0	10.0	12.5	17.5	13.0	22.2	28.0	30.0	36.0	40.0
450	457.0	478	4.0	5.0	8.0	8.0	8.0	11.0	10.0	14.2	20.0	13.0	25.0	30.0	36.0	40.0	45.0
500	508.0	529	5.0	5.6	8.0	8.0	10.0	12.5	10.0	16.0	20.0	13.0	28.0	32.0	40.0	45.0	50.0
550	559	–	5.0	5.6	–	8.0	–	–	10.0	–	–	13.0	30.0	–	–	–	–
600	610	630	5.6	6.3	–	8.0	–	–	10.0	17.5	–	13.0	32.0	–	–	–	–
650	660	–	–	–	–	8.0	–	–	10.0	–	–	13.0	–	–	–	–	–
700	711	720	–	–	–	8.0	–	–	10.0	–	–	13.0	–	–	–	–	–
750	762	–	–	–	–	8.0	–	–	10.0	–	–	13.0	–	–	–	–	–
800	813	820	–	–	–	8.0	–	–	10.0	–	–	13.0	–	–	–	–	–
850	864	–	–	–	–	8.0	–	–	10.0	–	–	13.0	–	–	–	–	–
900	914	920	–	–	–	8.0	–	–	10.0	–	–	13.0	–	–	–	–	–
950	965	–	–	–	–	8.0	–	–	10.0	–	–	13.0	–	–	–	–	–
1000	1016	1020	–	–	–	8.0	–	–	10.0	–	–	13.0	–	–	–	–	–
1050	1067	–	–	–	–	8.0	–	–	10.0	–	–	13.0	–	–	–	–	–
1100	1118	1120	–	–	–	8.0	–	–	10.0	–	–	13.0	–	–	–	–	–
1150	1168	–	–	–	–	8.0	–	–	10.0	–	–	13.0	–	–	–	–	–
1200	1219	1220	–	–	–	8.0	–	–	10.0	–	–	13.0	–	–	–	–	–

Manufacturing standards

GB12459-90	Steel butt-welded seamless pipe fittings
GB/T13401-92 GB/14383-93	Butt-welded pipe fittings made of steel plate
SH3408-96	Steel butt-welded seamless pipe fittings
SH3409-96	Butt-welded pipe fittings made of steel plate
SH3410-96	Socket welded pipe fittings
GD87-1101	Typical design of steam pipe parts and components in thermal power plant
HGJ514-87	Seamless butt-welding pipe fittings of carbon steel and low alloy steel
SY7510-87	Butt-welded steel pipe fittings
IS05251-1981(E)	Stainless steel butt-welding fi ttjngs
IS03419-1981(E)	Non-alloy and alloy steel butt-welding fittings
ANSI B16.9(1986)	Factory-made wronght Steel butt-welding fittings
ANSI B16.11(1980)	Forged steel fi ttings, socket-welding and threaded
ANSI B16.28(1986)	Wrought steel butt-welding short elbows and returns
ASTM A234	Elevated austenitic stainless steel and alloy steel for moderate and
	Elevated temperatures
ASTM A403	Wrought austenitic stainless steel and alloy steel for moderate
	Elevated temperatures
DIN 2605-2642	Steel butt-welded seamless pipe fittings
	Butt-welded pipe fittings made of steel plate
JIS B2311-1982	The general distribution pipe is made of steel sudden joint and dissolution type pipe relay
JIS B2312-1982	The distribution pipe is made of steel sudden joint and dissolving type pipe relay
JIS B2313-1982	The steel plate of the distribution pipe is used to make the sudden joint and dissolution type pipe relay
JIS B2316-1982	The distribution pipe is made of steel differential solubility type pipe relay
ANSI-GB and industry standards	Flat welding, butt welding flange series products
	We can also produce it according to sustomers' drawings and standards.

Material

10#, 20#, 20g, A3, 16Mn, 16MnR, Cr5Mo, 15CrMo, 12CrMo, 12Cr1Mov, Cr2Mo, Cr9Mo, 10CrMo910, 15Cr1Mo1v,
1Cr18Ni9Ti, 0Cr18Ni9, Cr25Ni20, 00Cr18Ni10, 00Cr17Ni14Mo2, 0Cr17Ni12MoTi
ASTM A234, A403, 304, 304L, 316, 316L
As for various Cu, AL, Ti and alloy materials, we can manufacture the products according to customers' materials.

Manufacturing ranges

Elbows	(Steel pipe)	DN15-DN800
	(Steel plate)	DN300-DN1400
	(180°)	DN40-DN400
Three way, Four way	(Steel pipe)	DN15-DN500
	(Steel plate)	DN300-DN1400
Reducers	(Steel pipe)	DN15-DN800
	(Steel plate)	DN300-DN1400
Caps		DN32-DN2000
Steel socket-welded fittings		DN15-DN80
Long radius bends		DN40-DN600, R≥2D
Flanges	Forged butt welding flange	DN15-DN600
	Flat welding flange made of steel plate	DN15-DN1200
	Flange cover made of steel plate	DN15-DN1200

Applicable standards

ASME Standards	
B16.9	Factory-Made Wrought Steel Butt welding Fittings
B16.28	Wrought Steel Butt welding Short Radius Elbows and Returns
B16.25	Butt welding Ends
B36.10	Welded and Seamless Wrought Steel Pipe
B36.19	Stainless Steel Pipe

ASME Standards	
A234	Piping Fittings of Wrought Carbon Steel and Alloy Steel for Moderate and high Temperature Service
A403	Wrought Austenitic Stainless Steel Piping Fittings
A420	Piping Fittings of Wrought Carbon Steel and Alloy Steel Low Temperature Service
A815	Wrought Ferritic, Ferritic/Austenitic, and Martensitic Stainless Steel Piping Fittings

MSS Standards	
SP-43	Wrought Stainless Steel Butt-Welding Fittings
SP-75	High Test Wrought Butt-Welding Fittings
SP-79	Socket Welding Reducer Inserts
SP-87	Factouy-Made Butt-Welding Fittings for Class I Nuclear Piping Applications

JIS Standards	
B2220	Steel Weldinq Pipe Flanges
B2311	Steel Butt-Welding Pipe Fittings for Ordinary Use
B2312	Steel Butt-Welding Pipe Fittings
B2313	Steel Plate Butt-Welding Pipe Fittings
G3452	Carbon Steel Pipes for Ordinary Piping
G3454	Carbon Steel Pipes for Pressure Service
G3457	Arc Welded Carbon Steel Pipes

DIN Standards	
2605-1	Steel Butt-Welding Pipe Fittings; Elbows and Bends with Reduced Pressure Factor
2609	Steel Butt-Welding Pipe Fittings; Technical Delivery Conditions
2615-1	Steel Butt-Welding Pipe Fittings; Tees with Reduced Pressure Factor
2615-2	Steel Butt-Welding Pipe Fittings; Tee For Use at Full Service Pressure
2616-1	Steel Butt-Welding Pipe Fittings; Eccentric Reducers with Reduced Pressure Factor
2616-2	Steel Butt-Welding Pipe Fittings; Reducers for Use at Full Service Pressure
2617	Steel Butt-Welding Pipe Fittings; Caps
1626	Welded Circular Unalloyed Steel Tubes Subject to Special Requirement; Technical
	Delivery Conditions
1629	Seamless Circular Unalloyed Steel Tubes Subject to Special Requirements; Technical
	Delivery Conditions
17175	Seamless Tubes of Heat-Resistant Steels; Technical Conditions of Delivery
50049	Materials Testing Certificates

EN(European) Standards	
10204	Inspection Documents for Metallic Products
10253-1	Butt-Welding Pipe Fittings; Wrought Carbon Steel for General Use and Without Specific
	Inspection Requirements

NACE Standards	
Mr0175	Sulfide Stress Cracking Resistant Metallic Materials for Oilfield Equipment

WESDOM

www.wsdsolution.com
www.wsd-valve.com

Flange

WESDOM GROUP

GB/T12459–2017 SH3408, SH3409 ASME B36.10M B36.16M

Nominal Pipe Size	Outside Diameter D		Nominal Wall Thickness																
DN	A	B	SCH 5s	SCH 10s	SCH 10	SCH 20	SCH 30	SCH 40s	STD	SCH 40	SCH 60	SCH 80s	XS	SCH 80	SCH 100	SCH 120	SCH 140	SCH 160	XXS
15	21.3	18	1.65	2.11	–	–	–	2.77	2.77	2.77	–	3.73	3.73	3.73	–	–	–	4.78	7.47
20	26.9	25	1.65	2.11	–	–	–	2.87	2.87	2.87	–	3.91	3.91	3.91	–	–	–	5.56	7.82
25	33.7	32	1.65	2.77	–	–	–	3.38	3.38	3.38	–	4.55	4.55	4.55	–	–	–	6.35	9.09
32	42.4	38	1.65	2.77	–	–	–	3.56	3.56	3.56	–	4.85	5.08	4.85	–	–	–	6.35	9.70
40	48.3	45	1.65	2.77	–	–	–	3.68	3.68	3.68	–	5.08	5.54	5.08	–	–	–	7.14	10.15
50	60.3	57	1.65	2.77	–	–	–	3.91	3.91	3.91	–	5.54	8.08	5.54	–	–	–	8.74	11.07
65	73.0	76	2.11	3.05	–	–	–	5.16	5.16	5.16	–	7.01	8.56	7.01	–	–	–	9.53	14.02
80	88.9	89	2.11	3.05	–	–	–	5.49	5.49	5.49	–	7.62	9.53	7.62	–	–	–	–	15.24
90	101.6	–	2.11	3.05	–	–	–	5.74	5.74	5.74	–	8.08	10.97	8.08	–	–	–	11.13	–
100	114.3	108	2.11	3.05	–	–	–	6.02	6.02	6.02	–	8.56	12.70	8.56	–	11.13	–	13.49	17.12
125	141.3	133	2.77	3.40	–	–	–	6.55	6.55	6.55	–	9.53	12.70	9.53	–	12.70	–	15.88	19.05
150	168.3	159	2.77	3.40	–	–	–	7.11	7.11	7.11	–	10.97	12.70	10.97	–	14.27	–	18.26	21.95
200	219.1	219	2.77	3.76	–	6.35	7.04	8.18	8.18	8.18	10.31	12.70	12.70	12.70	15.09	18.26	20.62	23.01	22.23
250	273.0	273	3.40	4.57	–	6.35	7.80	9.27	9.27	9.27	12.70	12.70	12.70	15.09	18.26	21.44	25.40	28.58	25.40
300	323.9	325	3.96	4.78	–	6.35	8.38	9.53	9.53	10.31	14.27	12.70	12.70	17.48	21.44	25.40	28.58	33.32	25.40
350	355.6	377	3.96	4.78	6.35	7.92	9.53	–	9.53	11.13	15.09	–	12.70	19.05	23.83	27.79	31.75	35.71	–
400	406.4	426	4.19	4.78	6.35	7.92	9.53	–	9.53	12.70	16.66	–	12.70	21.44	26.19	30.96	36.53	40.49	–
450	457	480	4.19	5.54	6.35	7.92	ii.13	–	9.53	14.27	19.05	–	12.70	23.83	29.36	34.93	39.67	45.24	–
500	508	530	4.78	5.54	6.35	9.53	12.70	–	9.53	15.09	20.62	–	12.70	26.19	32.54	38.10	44.45	50.01	–
550	559	–	4.78	6.35	6.35	9.53	12.70	–	9.53	–	22.23	–	12.70	28.58	34.93	41.28	47.63	53.98	–
600	610	630	5.54	6.35	6.35	9.53	14.27	–	9.53	17.48	24.61	–	12.70	30.96	38.89	46.02	52.37	59.54	–
650	660	–	–	6.35	7.92	12.70	–	–	9.53	–	–	–	12.70	–	–	–	–	–	–
700	711	720	–	–	7.92	12.70	15.88	–	9.53	–	–	–	12.70	–	–	–	–	–	–
750	762	–	6.35	7.92	7.92	12.70	15.88	–	9.53	17.48	–	–	12.70	–	–	–	–	–	–
800	813	820	–	–	7.92	12.70	15.88	–	9.53	17.48	–	–	12.70	–	–	–	–	–	–
850	964	–	–	–	7.92	12.70	15.88	–	9.53	19.05	–	–	12.70	–	–	–	–	–	–
900	914	–	–	–	7.92	12.70	15.88	–	9.53	–	–	–	12.70	–	–	–	–	–	–
950	965	–	–	–	–	–	–	–	9.53	–	–	–	–	–	–	–	–	–	–
1000	1016	–	–	–	–	–	–	–	9.53	–	–	–	–	–	–	–	–	–	–
1050	1067	–	–	–	–	–	–	–	9.53	–	–	–	–	–	–	–	–	–	–
1100	1118	–	–	–	–	–	–	–	9.53	–	–	–	–	–	–	–	–	–	–
1150	1168	–	–	–	–	–	–	–	9.53	–	–	–	–	–	–	–	–	–	–
1200	1219	–	–	–	–	–	–	–	9.53	–	–	–	–	–	–	–	–	–	–

SCH5s, 10s, 20s applies for stainless steel fittings.

Outside diameter and wall thickness

JIS B2311, B2312, B2313

Nominal Pipe Size		Outside Diameter		Nominal Wall Thickness																
DN	NPS	D	SGP	SCH 5s	SCH 10s	SCH 10	SCH 20	SCH 30	SCH 40s	STD	SCH 40	SCH 60	SCH 80s	XS	SCH 80	SCH 100	SCH 120	SCH 140	SCH 160	XXS
15	1/2	21.7	2.8	1.65	2.1	–	2.5	–	2.8	2.8	2.8	–	3.7	3.7	3.7	–	–	–	4.8	7.5
20	3/4	27.2	2.8	1.65	2.1	–	2.5	–	2.9	2.9	2.9	–	3.9	3.9	3.9	–	–	–	5.6	7.8
25	1	34.0	3.2	1.65	2.8	–	3.0	–	3.4	3.4	3.4	–	4.5	4.5	4.5	–	–	–	6.4	9.1
32	1 1/4	42.7	3.5	1.65	2.8	–	3.0	–	3.6	3.6	3.6	–	4.9	4.9	4.9	–	–	–	6.4	9.7
40	1 1/2	48.6	3.5	1.65	2.8	–	3.0	–	3.7	3.7	3.7	–	5.1	5.1	5.1	–	–	–	7.1	10.2
50	2	60.5	3.8	1.65	2.8	–	3.5	–	3.9	3.9	3.9	–	5.5	5.5	5.5	–	–	–	8.7	11.1
65	2 1/2	76.3	4.2	2.1	3.0	–	3.5	–	5.2	5.2	5.2	–	7.0	7.0	7.0	–	–	–	9.5	14.0
80	3	89.1	4.2	2.1	3.0	–	4.0	–	5.2	5.5	5.2	–	7.6	7.6	7.6	–	–	–	11.1	15.2
90	3 1/2	101.6	4.2	2.1	3.0	–	4.0	–	5.7	5.7	5.7	–	8.1	8.1	8.1	–	–	–	–	–
100	4	114.3	4.5	2.1	3.0	–	4.0	–	6.0	6.0	6.0	–	8.6	8.6	8.6	–	11.1	–	13.5	17.1
125	5	139.8	4.5	2.8	3.4	–	5.0	–	6.6	6.6	6.6	–	9.5	9.5	9.5	–	12.7	–	15.9	19.0
150	6	165.2	5.0	2.8	3.4	–	5.0	–	7.1	7.1	7.1	–	11.0	11.0	11.0	–	14.3	–	18.2	21.9
200	8	216.3	5.8	2.8	4.0	–	6.5	7.0	8.2	8.2	8.2	10.3	12.7	12.7	12.7	15.1	18.2	20.6	23.0	22.2
250	10	267.4	6.6	3.4	4.0	–	6.5	7.8	9.3	9.3	9.3	12.7	12.7	12.7	15.1	18.3	21.4	25.4	28.6	25.4
300	12	318.5	6.9	4.0	4.5	–	6.5	8.4	9.5	9.5	10.3	14.3	12.7	12.7	17.4	21.4	25.4	28.6	33.3	25.4
350	14	355.6	7.9	4.0	5.0	6.4	8.0	9.5	9.5	9.5	11.1	15.1	–	12.7	19.0	23.8	27.8	31.8	35.7	–
400	16	406.4	7.9	4.5	5.0	6.4	8.0	9.5	9.5	9.5	12.7	16.1	–	12.7	21.4	26.2	30.9	36.5	40.5	–
450	18	457.2	7.9	4.5	5.0	6.4	8.0	11.1	9.5	9.5	14.3	19.0	–	12.7	23.8	29.4	34.9	39.7	45.2	–
500	20	508.0	7.9	5.0	5.5	6.4	9.5	12.7	9.5	9.5	15.1	20.6	–	12.7	26.2	32.5	38.1	44.4	50.0	–
550	22	558.8	–	5.0	5.5	6.4	9.5	12.7	9.5	9.5	15.9	22.2	–	12.7	28.6	34.9	41.3	47.6	54.0	–
600	24	609.6	–	5.5	6.5	6.4	9.5	14.3	9.5	9.5	17.5	24.6	–	12.7	31.0	38.9	46.0	52.4	59.5	–
650	26	660.4	–	5.5	8.0	7.9	12.7	–	–	9.5	–	–	–	12.7	34.0	–	–	–	–	–
700	28	711.2	–	5.5	8.0	7.9	12.7	15.9	–	9.5	17.5	–	–	12.7	–	–	–	–	–	–
750	30	762.0	–	6.5	8.0	7.9	12.7	15.9	9.5	9.5	17.5	–	–	12.7	–	–	–	–	–	–
800	32	812.8	–	–	8.0	7.9	12.7	15.9	–	9.5	17.5	–	–	12.7	–	–	–	–	–	–
850	34	863.6	–	–	8.0	7.9	12.7	15.9	–	9.5	17.5	–	–	12.7	–	–	–	–	–	–
900	36	914.4	–	–	8.0	7.9	12.7	15.9	–	9.5	19.1	–	–	12.7	–	–	–	–	–	–
950	38	965.2	–	–	–	–	–	–	–	9.5	–	–	–	12.7	–	–	–	–	–	–
1000	40	1016.0	–	–	9.5	–	14.3	–	–	9.5	26.2	–	–	12.7	–	–	–	–	–	–
1050	42	1066.8	–	–	–	–	–	–	–	9.5	–	–	–	12.7	–	–	–	–	–	–
1100	44	1117.6	–	–	–	–	–	–	–	9.5	–	–	–	12.7	–	–	–	–	–	–
1150	46	1168.4	–	–	–	–	–	–	–	9.5	–	–	–	12.7	–	–	–	–	–	–
1200	48	1219.2	–	–	–	–	–	–	–	9.5	–	–	–	12.7	–	–	–	–	–	–

SCH5s, 10s, 20s, 40s, 80s applies for stainless steel fittings.

ANSI flat welded steel pipe flange with neck SO(ASME B16.5, HG20616-97)

Flange

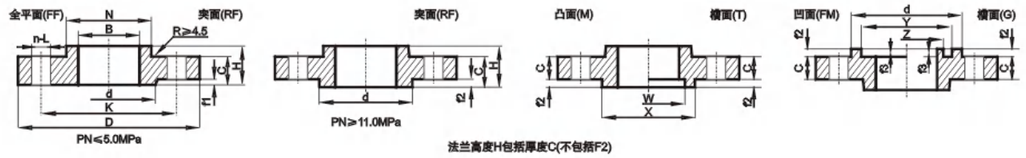

PN2.0MPa(Class 150) ANSI B16.5, Slip On Forged Flange

Nominal Diaeter		Pipe Outside Diameter	Link Size					Seal Surface Size		Flange Thickness	Flange Inside	Flange Neck	Flange Hight	Approx Weight
			Flange outer diameter	Bolt hole center circle diameter	Bolt hole diameter	Number of bolt holes	Thread							
NPS(in)	DN	A	D	K	L	n	Th	Raised face d	Plat form height f1	C	D	N	H	(kg)
1/2	15	21.3	90	60.5	16	4	M14	35	1.6	11.5	22	30	16	0.41
3/4	20	26.9	100	70	16	4	M14	43	1.6	13	27.5	38	16	0.58
1	25	33.7	110	79.5	16	4	M14	51	1.6	14.5	34.5	49	17	0.80
1 1/4	32	42.4	120	89	16	4	M14	63.5	1.6	16	43.5	59	21	1.07
1 1/2	40	48.3	130	98.5	16	4	M14	73	1.6	17.5	49.5	65	22	1.37
2	50	60.3	150	120.5	18	4	M16	92	1.6	19.5	61.5	78	25	2.01
2 1/2	65	76.1	180	139.5	18	4	M16	105	1.6	22.5	77.5	90	29	3.32
3	80	88.9	190	152.5	18	4	M16	127	1.6	24	90.5	108	30	3.83
4	100	114.3	230	190.5	18	8	M16	157.5	1.6	24	116	135	33	5.40
5	125	139.7	255	216	22	8	M20	186	1.6	24	141.5	164	36	6.26
6	150	168.3	280	241.5	22	8	M20	216	1.6	25.5	170.5	192	40	7.50
8	200	219.1	345	298.5	22	8	M20	270	1.6	29	221.5	246	44	12.3
10	250	273	405	362	26	12	M24	324	1.6	30.5	276.5	305	49	16.2
12	300	323.9	485	432	26	12	M24	381	1.6	32	327.5	365	56	26.5
14	350	355.6	535	476	29.5	12	M27	413	1.6	35	359.5	400	57	34.5
16	400	406.4	600	540	29.5	16	M27	470	1.6	37	411	457	64	45.5
18	450	457	635	578	32.5	16	M30	533.5	1.6	40	462	505	68	48.5
20	500	508	700	635	32.5	20	M30	584	1.6	43	513.5	559	73	61.8
24	600	610	815	749.5	35.5	20	M33	692	1.6	48	616.5	664	83	87.7

PN5.0MPa(Class 300) ANSI B16.5, Slip On Forged Flange

Nominal Diaeter		Pipe Outside Diameter	Link Size					Seal Surface Size		Flange Thickness	Flange Inside	Flange Neck	Flange Hight	Approx Weight
			Flange outer diameter	Bolt hole center circle diameter	Bolt hole diameter	Number of bolt holes	Thread							
NPS(in)	DN	A	D	K	L	n	Th	Raised face d	Plat form height f1	C	D	N	H	(kg)
1/2	15	21.3	95	66.5	16	4	M14	35	1.6	14.5	22	38	22	0.63
3/4	20	26.9	120	82.5	18	4	M16	43	1.6	16	27.5	48	25	1.16
1	25	33.7	125	89	18	4	M16	51	1.6	17.5	34.5	54	27	1.37
1 1/4	32	42.4	135	98.5	18	4	M16	63.5	1.6	19.5	43.5	64	27	1.75
1 1/2	40	48.3	155	114.5	22	4	M20	73	1.6	21	49.5	70	30	2.47
2	50	60.3	165	127	18	8	M16	92	1.6	22.5	61.5	84	33	2.90
2 1/2	65	76.1	190	149	22	8	M20	105	1.6	25.5	77.5	100	38	4.17
3	80	88.9	210	168.5	22	8	M20	127	1.6	29	90.5	118	43	5.92
4	100	114.3	255	200	22	8	M20	157.5	1.6	32	116	146	48	9.73
5	125	139.7	280	235	22	8	M20	186	1.6	35	141.5	178	51	12.4
6	150	168.3	320	270	22	12	M20	216	1.6	37	170.5	206	52	16.0
8	200	219.1	380	330	26	12	M24	270	1.6	41.5	221.5	260	62	23.9
10	250	273	445	387.5	29.5	16	M27	324	1.6	48	276.5	321	67	34.0
12	300	323.9	520	451	32.5	16	M30	381	1.6	51	327.5	375	73	49.1
14	350	355.6	585	514.5	32.5	20	M30	413	1.6	54	359.5	426	76	69.1
16	400	406.4	650	571.5	35.5	20	M33	470	1.6	57.5	411	483	83	88.9
18	450	457	710	628.5	35.5	24	M33	533.5	1.6	60.5	462	533	89	107.2
20	500	508	775	686	35.5	24	M33	584	1.6	63.5	513.5	587	95	132.9
24	600	610	915	813	42	24	M39×3	692	1.6	70	616.5	702	104	198.7

ANSI flat welded steel pipe flange with neck SO(ASME B16.5, HG20616-97)

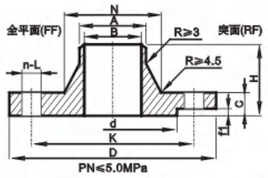

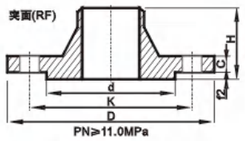

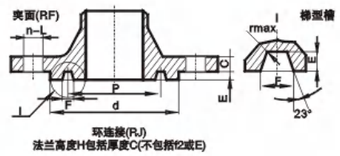

注：带颈对焊法兰的锥颈斜度应不大于45° 且应具有斜度不大于7° 的直边段，直边段长度不小于7mm。

PN2.0MPa(Class 150) ANSI B16.5, Welding Neck Forged Flange

Nominal Diaeter		Pipe Outside Diameter	Link Size					Seal Surface Size		Flange Thickness	Flange Inside	Flange Neck	Flange Hight	Approx Weight
			Flange outer diameter	Bolt hole center circle diameter	Bolt hole diameter	Number of bolt holes	Thread							
NPS(in)	DN	A	D	K	L	n	Th	Raised face d	Plat form height f1	C	D	N	H	(kg)
1/2	15	21.3	90	60.5	16	4	M14	35	1.6	11.5	15.5	30	48	0.91
3/4	20	26.9	100	70	16	4	M14	43	1.6	13	21	38	52	0.91
1	25	33.7	110	79.5	16	4	M14	51	1.6	14.5	27	49	56	1.14
1 1/4	32	42.4	120	89	16	4	M14	63.5	1.6	16	35	59	57	1.14
1 1/2	40	48.3	130	98.5	16	4	M14	73	1.6	17.5	41	65	62	1.81
2	50	60.3	150	120.5	18	4	M16	92	1.6	19.5	52	78	64	2.72
2 1/2	65	76.1	180	139.5	18	4	M16	105	1.6	22.5	66	90	70	4.45
3	80	88.9	190	152.5	18	4	M16	127	1.6	24	77.5	108	70	5.22
4	100	114.3	230	190.5	18	8	M16	157.5	1.6	24	101.5	135	76	7.49
5	125	139.7	255	216	22	8	M20	186	1.6	24	127	164	89	9.53
6	150	168.3	280	241.5	22	8	M20	216	1.6	25.5	154	192	89	11.8
8	200	219.1	345	298.5	22	8	M20	270	1.6	29	203	246	102	19.1
10	250	273	405	362	26	12	M24	324	1.6	30.5	255	305	102	24.5
12	300	323.9	485	432	26	12	M24	381	1.6	32	303.5	365	114	39.9
14	350	355.6	535	476	29.5	12	M27	413	1.6	35	333.5	400	127	51.8
16	400	406.4	600	540	29.5	16	M27	470	1.6	37	381	457	127	64.5
18	450	457	635	578	32.5	16	M30	533.5	1.6	40	428.5	505	140	74.9
20	500	508	700	635	32.5	20	M30	584	1.6	43	476	559	145	89.4
22	550	559	750	692	35.5	20	M33	641	1.6	46	525	610	149	103.5
24	600	610	815	749.5	35.5	20	M33	692	1.6	48	575	664	152	121.7

PN5.0MPa(Class 300) ANSI B16.5, Welding Neck Forged Flange

Nominal Diaeter		Pipe Outside Diameter	Link Size					Seal Surface Size		Flange Thickness	Flange Inside	Flange Neck	Flange Hight	Approx Weight
			Flange outer diameter	Bolt hole center circle diameter	Bolt hole diameter	Number of bolt holes	Thread							
NPS(in)	DN	A	D	K	L	n	Th	Raised face d	Plat form height f1	C	D	N	H	(kg)
1/2	15	21.3	95	66.5	16	4	M14	35	1.6	14.5	15.5	38	52	0.91
3/4	20	26.9	120	82.5	18	4	M16	43	1.6	16	21	48	57	1.36
1	25	33.7	125	89	18	4	M16	51	1.6	17.5	27	54	62	1.82
1 1/4	32	42.4	135	98.5	18	4	M16	63.5	1.6	19.5	35	64	65	2.27
1 1/2	40	48.3	155	114.5	22	4	M20	73	1.6	21	41	70	68	3.18
2	50	60.3	165	127	18	8	M16	92	1.6	22.5	52	84	70	3.36
2 1/2	65	76.1	190	149	22	8	M20	105	1.6	25.5	66	100	76	5.45
3	80	88.9	210	168.5	22	8	M20	127	1.6	29	77.5	118	79	8.17
4	100	114.3	255	200	22	8	M20	157.5	1.6	32	101.5	146	86	12.1
5	125	139.7	280	235	22	8	M20	186	1.6	35	127	178	98	16.3
6	150	168.3	320	270	22	12	M20	216	1.6	37	154	206	98	20.4
8	200	219.1	380	330	26	12	M24	270	1.6	41.5	203	260	111	31.3
10	250	273	445	387.5	29.5	16	M27	324	1.6	48	255	321	117	45.4
12	300	323.9	520	451	32.5	16	M30	381	1.6	51	303.5	375	130	64.5
14	350	355.6	585	514.5	32.5	20	M30	413	1.6	54	323.5	426	143	93.5
16	400	406.4	650	571.5	35.5	20	M33	470	1.6	57.5	371	483	146	113.1
18	450	457	710	628.5	35.5	24	M33	533.5	1.6	60.5	417	533	159	138.9
20	500	508	775	686	35.5	24	M33	584	1.6	63.5	468	587	162	167.5
22	550	559	840	743	42	24	M39×3	641	1.6	66.5	509	640	165	199.4
24	600	610	915	813	42	24	M39×3	692	1.6	70	560	702	168	235.6

ANSI neck butt welding steel pipe flange

PN2.0MPa(Class 600) ANSI B16.5, Welding Neck Forged Flange

Nominal Diaeter		Outer diameter of steel pipe (outer diameter of flange welding end)	Link Size					Flange Thickness	Flange neck big end	Flange inner diameter	Flange Hight	Approx Weight
			Flange outer diameter	Bolt hole center circle diameter	Bolt hole diameter	Thread	Number of bolt holes					
DN	NPS	A	D	K	L	Th	n	C	N	B	H	(kg)
15	1/2	21.3	95	66.7	16	M14	4	14.3	38	–	52	1.36
20	3/4	26.9	115	82.6	18	M16	4	15.9	48	–	57	1.59
25	1	33.7	125	88.9	18	M16	4	17.5	54	–	62	1.82
32	1 1/4	42.4	135	98.4	18	M16	4	20.7	64	–	67	2.50
40	1 1/2	48.3	155	114.3	22	M20	4	22.3	70	–	70	3.63
50	2	60.3	165	127.0	18	M16	8	25.4	84	–	73	4.54
65	2 1/2	76.1	190	149.2	22	M20	8	28.6	100	–	79	6.36
80	3	88.9	210	168.3	22	M20	8	31.8	117	–	83	10.3
100	4	114.3	275	215.9	26	M24	8	38.1	152	–	102	16.8
125	5	139.7	330	266.7	30	M27	8	44.5	189	–	114	30.9
150	6	168.3	355	292.1	30	M27	12	47.7	222	–	117	33.1
200	8	219.1	420	349.2	33	M30	12	55.6	273	–	133	50.9
250	10	273	510	431.8	36	M33	16	63.5	343	–	152	85.8
300	12	323.9	560	489	36	M33	20	66.7	409	–	156	102.6
350	14	355.6	605	527	39	M36×3	20	69.9	432	–	165	157.5
400	16	406.4	685	603.2	42	M39×3	20	76.2	495	–	178	218.4
450	18	457	745	654	45	M42×3	20	82.6	546	–	184	252.0
500	20	508	815	723.9	45	M42×3	24	88.9	610	–	190	313.2
600	24	610	940	838.2	51	M48×3	24	101.6	718	–	203	443.6

PN5.0MPa(Class 900) ANSI B16.5, Welding Neck Forged Flange

Nominal Diaeter		Outer diameter of steel pipe (outer diameter of flange welding end)	Link Size					Flange Thickness	Flange neck big end	Flange inner diameter	Flange Hight	Approx Weight
			Flange outer diameter	Bolt hole center circle diameter	Bolt hole diameter	Thread	Number of bolt holes					
DN	NPS	A	D	K	L	Th	n	C	N	B	H	(kg)
15	1/2	21.3	120	82.6	22	M20	4	22.3	38	–	60	3.18
20	3/4	26.9	130	88.9	22	M20	4	25.4	44	–	70	3.18
25	1	33.7	150	101.6	26	M24	4	28.6	52	–	73	3.86
32	1 1/4	42.4	160	111.1	26	M24	4	28.6	64	–	73	4.54
40	1 1/2	48.3	180	123.8	30	M27	4	31.8	70	–	83	6.36
50	2	60.3	215	165.1	26	M24	8	38.1	105	–	102	10.9
65	2 1/2	76.1	245	190.5	30	M27	8	41.3	124	–	105	16.3
80	3	88.9	240	190.5	26	M24	8	38.1	127	–	102	13.2
100	4	114.3	290	235.0	33	M30	8	44.5	159	–	114	23.2
125	5	139.7	350	279.4	36	M33	8	50.8	190	–	127	39.1
150	6	168.3	380	317.5	33	M30	12	55.6	235	–	140	49.9
200	8	219.1	470	393.7	39	M36×3	12	63.5	298	–	162	84.9
250	10	273	545	469.9	39	M36×3	16	69.9	368	–	184	121.7
300	12	323.9	610	533.4	39	M36×3	20	79.4	419	–	200	168.9
350	14	355.6	640	558.8	42	M39×3	20	85.8	451	–	213	255.2
400	16	406.4	705	616	45	M42×3	20	88.9	508	–	216	311.0
450	18	457	785	685.8	51	M48×3	20	101.6	565	–	229	419.5
500	20	508	855	749.3	55	M52×3	20	108	622	–	248	528.5
600	24	610	1040	901.7	68	M64×3	20	139.7	749	–	267	956.6

PN2.0MPa(Class 1500) ANSI B16.5, Welding Neck Forged Flange

Nominal Diaeter		Outer diameter of steel pipe (outer diameter of flange welding end)	Link Size					Flange Thickness	Flange neck big end	Flange inner diameter	Flange Hight	Approx Weight
			Flange outer diameter	Bolt hole center circle diameter	Bolt hole diameter	Thread	Number of bolt holes					
DN	NPS	A	D	K	L	Th	n	C	N	B	H	(kg)
15	1/2	21.3	120	82.6	22	M20	4	22.3	38	–	60	3.18
20	3/4	26.9	130	88.9	22	M20	4	25.4	44	–	70	3.18
25	1	33.7	150	101.6	26	M24	4	28.6	52	–	73	3.86
32	1 1/4	42.4	160	111.1	26	M24	4	28.6	64	–	73	4.54
40	1 1/2	48.3	180	123.8	30	M27	4	31.8	70	–	83	6.36
50	2	60.3	215	165.1	26	M24	8	38.1	105	–	102	10.9
65	2 1/2	76.1	245	190.5	30	M27	8	41.3	124	–	105	16.34
80	3	88.9	265	203.2	33	M30	8	47.7	133	–	117	21.8
100	4	114.3	310	241.3	36	M33	8	54	162	–	124	31.3
125	5	139.7	375	292.1	42	M39×3	8	73.1	197	–	156	59.9
150	6	168.3	395	317.5	39	M36×3	12	82.6	229	–	171	74.5
200	8	219.1	485	393.7	45	M42×3	12	92.1	292	–	213	123.9
250	10	273	585	482.6	51	M48×3	12	108	368	–	254	206.1
300	12	323.9	675	571.5	55	M52×3	16	123.9	451	–	283	313.3
350	14	355.6	750	635	60	M56×3	16	133.4	495	–	298	406.5
400	16	406.4	825	704.8	68	M64×3	16	146.1	552	–	311	525
450	18	457	915	774.7	74	M70×3	16	162	597	–	327	687.2
500	20	508	985	831.8	80	M76×3	16	177.8	641	–	356	852.6
600	24	610	1170	990.6	94	M90×3	16	203.2	762	–	406	1366.8

PN5.0MPa(Class 2500) ANSI B16.5, Welding Neck Forged Flange

Nominal Diaeter		Outer diameter of steel pipe (outer diameter of flange welding end)	Link Size					Flange Thickness	Flange neck big end	Flange inner diameter	Flange Hight	Approx Weight
			Flange outer diameter	Bolt hole center circle diameter	Bolt hole diameter	Thread	Number of bolt holes					
DN	NPS	A	D	K	L	Th	n	C	N	B	H	(kg)
15	1/2	21.3	135	88.9	22	M20	4	30.2	43	–	73	3.63
20	3/4	26.9	140	95.2	22	M20	4	31.8	51	–	79	4.09
25	1	33.7	160	108	26	M24	4	35	57	–	89	5.9
32	1 1/4	42.4	185	130.2	30	M27	4	38.1	73	–	95	9.08
40	1 1/2	48.3	205	146	33	M30	4	44.5	79	–	111	12.7
50	2	60.3	235	171.4	30	M27	8	50.9	95	–	127	19.1
65	2 1/2	76.1	265	196.8	33	M30	8	57.2	114	–	143	23.6
80	3	88.9	305	228.6	36	M33	8	66.7	133	–	168	42.7
100	4	114.3	355	273	42	M39×3	8	76.2	165	–	190	66.3
125	5	139.7	420	323.8	48	M45×3	8	92.1	203	–	229	110.8
150	6	168.3	485	368.3	55	M52×3	8	108	235	–	273	171.6
200	8	219.1	550	438.2	55	M52×3	12	127	305	–	318	261.5
250	10	273	675	539.8	68	M64×3	12	165.1	375	–	419	484.9
300	12	323.9	760	619.1	74	M70×3	12	184.2	441	–	464	730.1

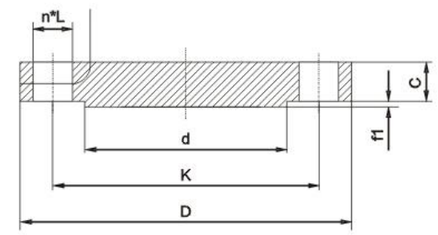

Class 150(PN20) Forged blind flange

Unit: mm

Nominal Diaeter		Link Size					Flange Thickness	Approx Weight
		Flange outer diameter	Bolt hole center circle diameter	Bolt hole diameter	Thread	Number of bolt holes		
DN	NPS	D	K	L	Th	n	C	(kg)
15	1/2	90	60.3	16	M14	4	9.6	0.43
20	3/4	100	69.9	16	M14	4	11.2	0.63
25	1	110	79.4	16	M14	4	12.7	0.89
32	1 1/4	115	88.9	16	M14	4	14.3	1.20
40	1 1/2	125	98.4	16	M14	4	15.9	1.58
50	2	150	120.7	18	M16	4	17.5	2.39
65	2 1/2	180	139.7	18	M16	4	20.7	4.07
80	3	190	152.4	18	M16	4	22.3	4.92
100	4	230	190.5	18	M16	8	22.3	7.13
125	5	255	215.9	22	M20	8	22.3	8.72
150	6	280	241.3	22	M20	8	23.9	11.4
200	8	345	298.58	22	M20	8	27	20.1
250	10	405	362	26	M24	12	28.6	28.7
300	12	485	431.8	26	M24	12	30.2	43.3
350	14	535	476.3	30	M27	12	33.4	58.2
400	16	595	539.8	30	M27	16	35	77.4
450	18	635	577.9	33	M30	16	38.1	94.0
500	20	700	635	33	M30	20	41.3	122.7
600	24	815	749.3	36	M33	20	46.1	187.0

ANSI B16.5, Forged Blind Flange

Class 300(PN50) Forged blind flange

Unit: mm

Nominal Diaeter		Link Size					Flange Thickness	Approx Weight
		Flange outer diameter	Bolthole center circle diameter	Bolthole diameter	Thread	Number of bolt holes		
DN	NPS	D	K	L	Th	n	C	(kg)
15	1/2	95	66.7	16	M14	4	12.7	0.63
20	3/4	115	82.6	18	M14	4	14.3	1.15
25	1	125	88.9	18	M16	4	15.9	1.40
32	1 1/4	135	98.4	18	M16	4	17.5	1.88
40	1 1/2	155	114.3	22	M20	4	19.1	2.65
50	2	165	127	18	M16	8	20.7	3.22
65	2 1/2	190	149.2	22	M20	8	23.9	4.80
80	3	210	168.3	22	M20	8	27	6.89
100	4	255	200	22	M20	8	30.2	11.5
125	5	280	235	22	M20	8	33.4	15.6
150	6	320	269.9	22	M20	12	35	21.4
200	8	380	330.2	26	M24	12	39.7	34.1
250	10	445	387.4	30	M27	16	46.1	53.5
300	12	520	450.8	33	M30	16	49.3	78.3
350	14	585	514.4	33	M30	20	52.4	105
400	16	650	571.5	36	M33	20	55.6	138.6
450	18	710	628.6	36	M33	24	58.8	174.3
500	20	775	685.8	36	M33	24	62	220.4
600	24	915	812.8	42	M39×3	24	68.3	339

Class 600(PN110) Forged blind flange

Unit: mm

Nominal Diaeter		Link Size					Flange Thickness	Approx Weight
		Flange outer diameter	Bolthole center circle diameter	Bolthole diameter	Thread	Number of bolt holes		
DN	NPS	D	K	L	Th	n	C	(kg)
15	1/2	95	66.7	16	M14	4	14.3	0.77
20	3/4	115	82.6	18	M16	4	15.9	1.37
25	1	125	88.9	18	M16	4	17.5	1.66
32	1 1/4	135	98.4	18	M16	4	20.7	2.36
40	1 1/2	155	114.3	22	M20	4	22.3	3.29
50	2	165	127	18	M16	8	25.4	4.24
65	2 1/2	190	149.2	22	M20	8	28.6	6.23
80	3	210	168.3	22	M20	8	31.8	8.63
100	4	275	215.9	26	M24	8	38.1	17.7
125	5	330	266.7	30	M27	8	44.5	29.4
150	6	355	292.1	30	M27	12	47.7	36.2
200	8	380	330.2	26	M24	12	34.1	59.1
250	10	445	387.4	30	M27	16	53.5	98.4
300	12	520	450.8	33	M30	16	78.3	125.3
350	14	585	514.4	33	M30	20	105	152.1
400	16	650	571.5	36	M33	20	138.6	214.1
450	18	710	628.6	36	M33	24	174.3	275.4
500	20	775	685.8	36	M33	24	220.4	352.4
600	24	915	812.8	42	M39×3	24	339	536.8

DIN flange 10Bar/DIN 2576 Slip-on Flagne/DIN2572 Blind flange/DIN2632 Welding neck flanges

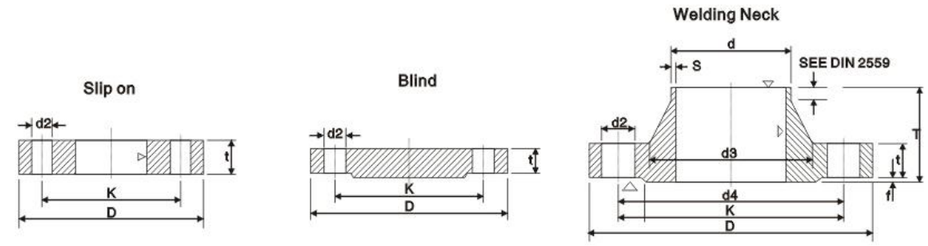

DIN Flange 10Bar

Unit: mm

Bore	d1	d2	Common Dimension					Hub					Raised Face		Drilling		Approx Weight(kg)		
			D	t			K	h1	d3	s	r	h2	d4	f	Number of Bolf	d2	DIN 2576	DIN 2632	DIN 2527
Nominal Bore				Welding Neck	Plat	Blind													
10	14	14.5	90	14	14	14	60	35	25	1.8	4	6	40	2	4	14	0.613	0.580	0.63
	17.2	17.7															0.605		
15	20	21	95	14	14	14	65	35	30	2	4	6	45	2	4	14	0.675	0.648	0.72
	21.3	22															0.669		
20	25	26	105	16	16	16	75	38	38	2.3	4	6	58	2	4	14	0.943	0.952	1.01
	26.9	27.6															0.936		
25	30	31	115	16	16	16	85	38	42	2.6	4	6	68	2	4	14	1.14	1.14	1.23
	33.7	34.4															1.11		
32	38	39	140	16	16	16	100	40	52	2.6	6	6	78	2	4	18	1.66	1.69	1.8
	42.4	43.1															1.62		
40	44.5	45.5	150	16	16	16	110	42	60	2.6	6	7	88	3	4	18	1.89	1.86	2.09
	48.3	49															1.86		
50	57	58.1	165	18	18	18	125	45	72	2.9	6	8	102	3	4	18	2.51	2.53	2.88
	60.3	61.1															2.47		
65	76.1	77.1	185	18	18	18	145	45	90	2.9	6	9	122	3	4	18	3	3.06	3.66
80	88.9	90.3	200	20	20	20	160	50	105	3.2	8	10	138	3	8	18	3.79	3.70	4.77
100	108	109.6	220	20	20	20	180	52	125	3.6	8	10	158	3	8	18	4.2	4.62	5.65
	114.3	115.9															4.03		
125	133	134.8	250	22	22	22	210	55	150	4	8	12	188	3	8	18	5.71	6.30	8.42
	139.7	141.6															5.46		
150	159	161.1	285	22	22	22	240	55	175	4.5	10	12	212	3	8	22	6.72	7.75	10.4
	168.3	170.5															6.57		
175	193.7	196.1	315	24	24	24	270	60	210	5.4	10	12	242	3	8	22	8.45	9.85	14
200	219.1	221.8	340	24	24	24	295	62	235	5.9	10	16	268	3	8	22	9.31	11.3	16
250	267	270.2	395	26	26	26	350	68	285	6.3	12	16	320	4	12	22	12.5	14.7	24
	273	276.2							292								11.9		

ANSI flat welded steel pipe flange with neck SO(ASME B16.5, HG20616-97)

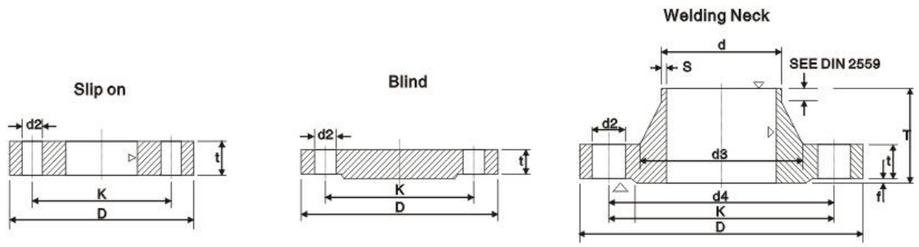

DIN Flange 10Bar Unit: mm

Bore	d1	d2	Common Dimension					Hub					Raised Face		Drilling		Approx Weight(kg)		
Nominal Bore			D	t			K	h1	d3	s	r	h2	d4	f	Number of Bolf	d2	DIN 2576	DIN 2632	DIN 2527
				Welding Neck	Plat	Blind													
300	323.9	327.6	445	26	26	26	400	68	344	7.1	12	16	370	4	12	22	13.8	17.4	31.9
350	355.6 368	359.7 372.2	505	26	28	26	460	68	385	7.1	12	16	430	4	16	22	20.6 19	21.6	41.9
400	406.4 419	411 423.7	565	26	32	26	515	72	440	7.1	12	16	482	4	16	26	27.9 25.9	26.2	51.2
500	508	513.6	670	28	38	28	620	75	542	7.1	12	16	585	4	20	26	41.1	38.1	77.8
600	610	616.5	780	28	40		726	80	642	7.1	12	18	685	5	20	30	51.87	44.6	
700	711	716	895	30	40		840	80	745	8	12	18	800	5	24	30	65.79	62.4	
800	813	818	1015	32	44		950	90	850	8	12	18	905	5	24	33	90.87	84.1	
900	914	920	1115	34	48		1050	95	950	10	12	20	1005	5	28	33	108.41	98.5	
1000	1016	1022	1230	34	50		1160	95	1052	10	16	20	1110	5	28	36	133.21	115	
1200	1220	1226	1455	38	54		1380	115	1255	11	16	25	1330	5	32	39	188.2	182	
1400	1420	1426	1675	42	60		1590	120	1460	12	16	25	1535	5	36	42	262.14	248	
1600	1620	1626	1915	46	64		1820	130	1665	14	16	25	1760	5	40	48	367.43	347	
1800	1820	18226	2115	50	70		2020	140	1868	15	16	30	1960	5	44	48	447.79	430	
2000	2020	2026	2325	54	76		2230	150	2072	16	16	30	2170	5	48	48	577.77	539	
2200	2220	2226	2550	58	82		2440	160	2275	18	18	35	2370	6	52	56	699.88	658	
2400	2420	2426	2760	62	88		2650	170	2478	20	20	35	2570	6	56	56	844.48	825	
2600	2620	2626	2960	66	94		2850	180	2680	22	22	40	2780	6	60	56	972.23	979	
2800	2820	2826	3180	70	100		3070	190	882	22	22	40	3000	6	64	56	1187.1	1156	
3000	3020	3026	3405	75	106		3290	200	3085	24	24	45	3210	6	68	62	1422.06	1420	

DIN flange DIN 16Bar Flange/DIN2576 Slip-on Flagne/ DIN2527 Blind flange/DIN2633 Welding neck flanges

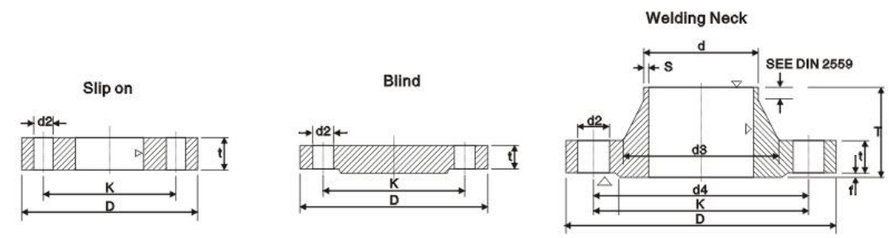

DIN Flange 16Bar Unit: mm

Bore	d1	d2	Common Dimension					Hub					Raised Face		Drilling		Approx Weight(kg)		
Nominal Bore			D	t			K	h1	d3	s	r	h2	d4	f	Number of Bolf	d2	DIN 2576	DIN 2631	DIN 2527
				Welding Neck	Plat	Blind													
10	14 17.2	14.5 17.7	90	14	14	14	60	35	25	1.8	4	6	40	2	4	14	0.613 0.605	0.580	0.63
15	20 21.3	21 22	95	14	14	14	65	35	30	2	4	6	45	2	4	14	0.675 0.669	0.648	0.72
20	25 26.9	26 27.6	105	16	16	16	75	38	38	2.3	4	6	58	2	4	14	0.943 0.936	0.952	1.01
25	30 33.7	31 34.4	115	16	16	16	85	38	42	2.6	4	6	68	2	4	14	1.14 1.11	1.14	1.23
32	38 42.4	39 43.1	140	16	16	16	100	40	52	2.6	6	6	78	2	4	18	1.66 1.62	1.69	1.8
40	44.5 48.3	45.5 49	150	16	16	16	110	42	60	2.6	6	7	88	3	4	18	1.89 1.86	1.86	2.09
50	57 60.3	58.1 61.1	165	18	18	18	125	45	72	2.9	6	8	102	3	4	18	2.51 2.47	2.53	2.88
65	76.1	77.1	185	18	18	18	145	45	90	2.9	6	9	122	3	4	18	3	3.06	3.66
80	88.9	90.3	200	20	20	20	160	50	105	3.2	8	10	138	3	8	18	3.79	3.70	4.77
100	108 114.3	109.6 115.9	220	20	20	20	180		125	3.6	8	10	158	3	8	18	4.2 4.03	4.62	5.65
125	133 139.7	134.8 141.6	250	22	22	22	210	55	150	4	8	12	188	3	8	18	5.71 5.46	6.30	8.42
150	159 168.3	161.1 170.5	285	22	22	22	240	55	175	4.5	10	12	212	3	8	22	6.72 6.57	7.75	10.4
175	193.7	196.1	315	24	24	24	270	60	210	5.4	10	12	242	3	8	22	8.45	9.85	14
200	219.1	221.8	340	24	24	24	295	62	235	5.9	10	16	268	3	12	22	9.31	11	16.1
250	267 273	270.2 276.2	405	26	26	26	355	70	285	6.3	12	16	320	3	12	26	13.4	15.6	24.9
300	323.9	327.6	395	28	28	28	410	78	344	7.1	12	16	378	4	12	26	17.4	22	35.1

DIN flange DIN 16Bar Flange/DIN2576 Slip-on Flagne/ DIN2527 Blind flange/DIN2633 Welding neck flanges

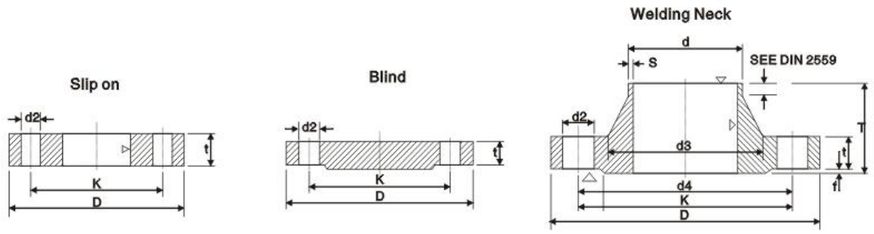

DIN Flange 16Bar

Unit: mm

Bore			Common Dimension					Hub					Raised Face		Drilling		Approx Weight(kg)		
Nominal Bore	d1	d2	D	t			K	h1	d3	s	r	h2	d4	f	Number of Bolf	d2	DIN 2576	DIN 2633	DIN 2527
				Welding Neck	Plat	Blind													
350	355.6 368	359.7 372.2	520	30	30	30	470	82	390	8	12	16	438	4	16	26	26.6	28.8	47.8
400	406.4 419	411 423.7	580	32	32	32	525	85	445	8	12	16	490	4	16	30	30.9	36.3	63.5
500	508	513.6	715	34	38	34	650	90	548	8	12	16	610	4	20	33	54	61	102
600	610	616.5	840	36	42	36	770	95	652	8.8	12	18	725	4	20	36	77.58	75.4	149.7
700	711	716	910	36	44	36	840	100	755	8.8	12	18	795	5	24	36	77.13	77	173.7
800	813	818	1025	38	50	38	950	105	855	10	12	20	900	5	24	39	106.35	101	235.5
900	914	920	1125	40	54	40	1050	110	955	10	12	20	1000	5	28	39	125.39	122	298.8
1000	1016	1022	1255	42	60	42	1170	120	1058	10	12	22	1115	5	28	42	177.99	162	390.7
1200	1220	1226	1485	48	68	48	1390	130	1262	12.5	16	30	1330	5	32	48	263.46	243	624.8
1400	1420	1426	1685	52	74	52	1590	145	1465	14.2	16	30	1530	5	36	48	329.77	323	872.6
1600	1620	1626	1930	58	82	58	1820	160	1668	16	16	35	1750	5	40	56	483.11	479	1275.1
1800	1820	1826	2130	62	88	62	2020	170	1870	17.5	16	35	1950	5	44	56	577.63	599	1661.9
2000	2020	2026	2345	66	94	66	2230	180	2072	20	16	40	2150	5	48	62	720.85	719	2142.1

BS4505 Blind Flange

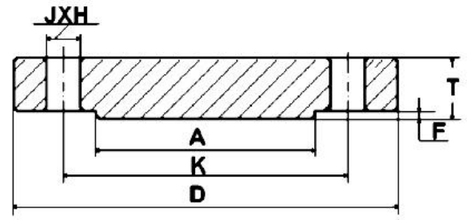

BS4504–105 PN10

Pressure PN	Size DN	Outer diameter D	Center distance K	Aperture H	Hole count H	Thickness T	Waterline station A	Waterline height H	FF single weight kg	RF single weight kg
	15	95	65	14	4	16	45	2	0.71	0.64
	20	105	75	14	4	18	58	2	1.01	0.93
	25	115	85	14	4	18	68	2	1.23	1.13
	32	140	100	18	4	18	78	2	1.81	1.66
	40	150	110	18	4	18	88	3	2.35	2.11
	50	165	125	18	4	18	102	3	2.88	2.59
	65	185	145	18	4	18	122	3	4.06	3.73
	80	200	160	18	8	20	138	3	4.62	4.28
BS4504	100	220	180	18	8	20	158	3	6.22	5.83
105 PN10	125	250	210	18	8	22	188	3	8.13	7.68
Blind flange	150	285	240	22	8	22	212	3	11.45	10.85
	200	340	295	22	8	24	268	3	16.54	15.81
	250	395	350	22	12	26	320	3	24.10	23.21
	300	445	400	22	12	26	370	4	30.84	29.47
	350	505	460	22	16	26	430	4	39.67	38.13
	400	565	515	26	16	26	482	4	49.47	47.6
	450	615	565	26	20	28	532	4	63.01	60.99
	500	670	620	26	20	28	585	4	75.22	72.92
	600	780	725	30	20	34	685	5	123.85	120.12

BS4504–105 PN16

Pressure PN	Size DN	Outer diameter D	Center distance K	Aperture H	Hole count H	Thickness T	Waterline station A	Waterline height H	FF single weight kg	RF single weight kg
	15	95	65	14	4	14	45	2	0.71	0.64
	20	105	75	14	4	16	58	2	1.01	0.93
	25	115	85	14	4	16	68	2	1.23	1.13
	32	140	100	18	4	16	78	2	1.81	1.66
	40	150	110	18	4	18	88	3	2.35	2.11
	50	165	125	18	4	18	102	3	2.88	2.59
	65	185	145	18	4	20	122	3	4.06	3.73
	80	200	160	18	8	20	138	3	4.62	4.28
BS4504	100	220	180	18	8	22	158	3	6.22	5.83
105 PN16	125	250	210	18	8	22	188	3	8.13	7.68
Blind flange	150	285	240	22	8	24	212	3	11.45	10.85
	200	340	295	22	12	26	268	3	17.61	16.91
	250	405	355	26	12	28	320	3	26.94	25.95
	300	460	410	26	12	30	378	4	37.67	36.17
	350	520	470	26	16	32	438	4	51.25	49.58
	400	580	525	30	16	36	490	4	71.52	69.50
	450	640	585	30	20	36	550	4	86.98	84.78
	500	715	650	33	20	44	610	4	132.87	129.98
	600	840	770	36	20	48	725	5	201.29	196.54

BS4504–105 PN25

Pressure PN	Size DN	Outer diameter D	Center distance K	Aperture H	Hole count H	Thickness T	Waterline station A	Waterline height H	FF single weight kg	RF single weight kg
BS4504 105 PN25 Blind flange	15	95	65	14	4	16	45	2	0.81	0.74
	20	105	75	14	4	18	58	2	1.14	1.05
	25	115	85	14	4	18	68	2	1.38	1.29
	32	140	100	18	4	18	78	2	2.03	1.88
	40	150	110	18	4	18	88	3	2.35	2.11
	50	165	125	18	4	20	102	3	3.20	2.91
	65	185	145	18	8	22	122	3	4.29	3.98
	80	200	160	18	8	24	138	3	5.54	5.20
	100	235	190	22	8	24	162	3	7.60	7.14
	125	270	220	26	8	26	188	3	10.83	10.23
	150	300	250	26	8	28	218	3	14.61	13.93
	200	360	310	26	12	30	278	3	22.49	21.67
	250	425	370	30	12	32	335	3	33.53	32.46
	300	485	430	30	16	34	395	4	46.32	44.73
	350	555	490	33	16	38	450	4	68.13	65.96
	400	620	550	36	16	40	505	4	89.75	87.07
	450	670	600	36	20	44	555	4	114.83	111.99
	500	730	660	36	20	45	615	4	140.76	137.59
	600	845	770	39	20	54	720	5	227.76	222.67

BS4504–105 PN40

Pressure PN	Size DN	Outer diameter D	Center distance K	Aperture H	Hole count H	Thickness T	Waterline station A	Waterline height H	FF single weight kg	RF single weight kg
BS4504 105 PN40 Blind flange	10	90	60	14	4	16	40	2	0.72	0.65
	15	95	65	14	4	16	45	2	0.81	0.74
	20	105	75	14	4	18	58	2	1.14	1.05
	25	115	85	14	4	18	68	2	1.38	1.29
	32	140	100	18	4	18	78	2	2.03	1.88
	40	150	110	18	4	18	88	3	2.35	2.11
	50	165	125	18	4	20	102	3	3.20	2.91
	65	185	145	18	8	22	122	3	4.29	3.98
	80	200	160	18	8	24	138	3	5.54	5.20
	100	235	190	22	8	24	162	3	7.60	7.14
	125	270	220	26	8	26	188	3	10.83	10.23
	150	300	250	26	8	28	218	3	14.61	13.93
	200	375	320	30	12	34	285	3	27.23	26.34
	250	450	385	33	12	38	345	3	44.41	43.11
	300	515	450	33	16	42	410	4	64.22	62.25
	350	580	510	36	16	46	465	4	89.59	87.14
	400	660	585	39	16	50	535	4	126.87	123.79
	450	685	610	39	20	54	560	4	146.20	143.11
	500	755	670	42	20	56	615	4	184.77	180.90
	600	890	795	48	20	70	735	5	322.21	315.86

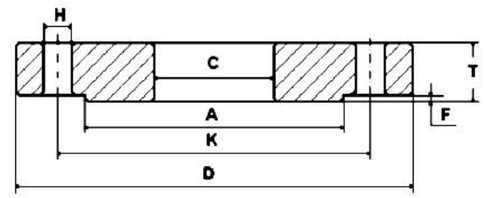

Pressure PN	Size DN	Outer diameter D	Center distance K	Aperture H	Hole count	Internal diameter C	Disc height T	Waterline station A	Waterline height F	FF single weight kg	RF single weight kg
EN1092 105 PN10 Flat flange	15	95	65	14	4	22	14	45	2	0.67	0.59
	20	105	75	14	4	27.5	16	58	2	0.94	0.85
	25	115	85	14	4	34.5	16	68	2	1.11	1.01
	32	140	100	18	4	43.5	18	78	2	1.82	1.67
	40	150	110	18	4	49.5	18	88	3	2.08	1.83
	50	165	125	18	4	61.5	19/20	102	3	2.60/2.73	2.31/2.45
	65	185	145	18	4	77.5	20	122	3	3.32	2.99
	80	200	160	18	8	90.5	20	138	3	3.61	3.27
	100	220	180	18	8	116	22	158	3	4.39	4.01
	125	250	210	18	8	141.5	22	188	3	5.41	4.96
	150	285	240	22	8	170.5	24	212	3	7.15	6.55
	200	340	295	22	8	221.5	24	268	3	9.28	8.54
	250	395	350	22	12	276.5	26	320	3	11.83	10.95
	300	445	400	22	12	327.5	26	370	4	13.63	12.26
	350	505	460	22	16	359.5	28	430	4	20.39	18.85
	400	565	515	26	16	411	32	482	4	27.54	25.66
	450	615	565	26	20	462	36	532	4	33.6	31.58
	500	670	620	26	20	513.5	38	585	4	40.26	37.96
	600	780	725	30	20	616.5	42	685	5	54.5	50.77

Pressure PN	Size DN	Outer diameter D	Center distance K	Aperture H	Hole count	Internal diameter C	Disc height T	Waterline station A	Waterline height F	FF single weight kg	RF single weight kg
BS4504 105 PN16 Flat flange	15	95	65	14	4	22	14	45	2	0.67	0.59
	20	105	75	14	4	27.5	16	58	2	0.94	0.85
	25	115	85	14	4	34.5	16	68	2	1.11	1.01
	32	140	100	18	4	43.5	18	78	2	1.82	1.67
	40	150	110	18	4	49.5	18	88	3	2.08	1.83
	50	165	125	18	4	61.5	19/20	102	3	2.60/2.73	2.31/2.45
	65	185	145	18	4	77.5	20	122	3	3.32	2.99
	80	200	160	18	8	90.5	20	138	3	3.61	3.27
	100	220	180	18	8	116	22	158	3	4.39	4.01
	125	250	210	18	8	141.5	22	188	3	5.41	4.96
	150	285	240	22	8	170.5	24	212	3	7.15	6.55
	200	340	295	22	12	221.5	26	268	3	9.74	9.04
	250	405	355	26	12	276.5	29	320	3	14.22	13.23
	300	460	410	26	12	327.5	32	378	4	19.00	17.5
	350	520	470	26	16	359.5	35	438	4	28.23	26.55
	400	580	525	30	16	411	38	490	4	35.89	33.87
	450	640	585	30	20	462	42	550	4	46.17	43.97
	500	715	650	33	20	513.5	46	610	4	64.08	61.18
	600	840	770	36	20	616.5	52	725	5	96.13	91.37

EN1092-1/2 / BS4504 Plate Flange Type 01

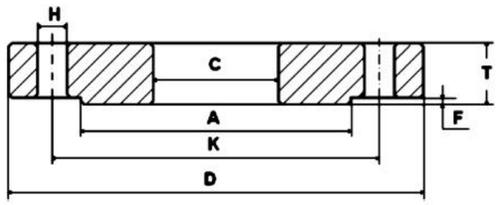

Pressure PN	Size DN	Outer diameter D	Center distance K	Aperture H	Hole count	Internal diameter C	Disc height T	Waterline station A	Waterline height F	FF single weight kg	RF single weight kg
EN1092 105 PN25 Flat flange	15	95	65	14	4	22	14	45	2	0.67	0.59
	20	105	75	14	4	27.5	16	58	2	0.94	0.85
	25	115	85	14	4	34.5	16	68	2	1.11	1.01
	32	140	100	18	4	43.5	18	78	2	1.82	1.67
	40	150	110	18	4	49.5	18	88	3	2.08	1.83
	50	165	125	18	4	61.5	20	102	3	2.73	2.45
	65	185	145	18	8	77.5	22	122	3	3.48	3.17
	80	200	160	18	8	90.5	24	138	3	4.33	3.99
	100	235	190	22	8	116	26	162	3	6.08	5.61
	125	270	220	26	8	141.5	28	188	3	8.20	7.61
	150	300	250	26	8	170.5	30	218	3	10.28	9.59
	200	360	310	26	12	221.5	32	278	3	14.30	13.48
	250	425	370	30	12	276.5	35	335	3	20.16	19.1
	300	485	430	30	16	327.5	38	395	4	26.63	25.03
	350	555	490	33	16	359.5	42	450	4	41.82	39.64
	400	620	550	36	16	411	46	505	4	55.27	52.59
	450	670	600	36	20	462	50	555	4	64.64	61.8
	500	730	660	36	20	513.5	56	615	4	84.06	80.89
	600	845	770	39	20	616.5	68	720	5	127.35	122.25

Pressure PN	Size DN	Outer diameter D	Center distance K	Aperture H	Hole count	Internal diameter C	Disc height T	Waterline station A	Waterline height F	FF single weight kg	RF single weight kg
BS4504 105 PN40 Flat flange	15	95	65	14	4	22	14	45	2	0.67	0.59
	20	105	75	14	4	27.5	16	58	2	0.94	0.85
	25	115	85	14	4	34.5	16	68	2	1.11	1.01
	32	140	100	18	4	43.5	18	78	2	1.82	1.67
	40	150	110	18	4	49.5	18	88	3	2.08	1.83
	50	165	125	18	4	61.5	20	102	3	2.73	2.45
	65	185	145	18	8	77.5	22	122	3	3.48	3.17
	80	200	160	18	8	90.5	24	138	3	4.33	3.99
	100	235	190	22	8	116	26	162	3	6.08	5.61
	125	270	220	26	8	141.5	28	188	3	8.2	7.61
	150	300	250	26	8	170.5	30	218	3	10.28	9.59
	200	375	320	30	12	221.5	36	285	3	17.94	17.04
	250	450	385	33	12	276.5	42	345	3	29.28	27.97
	300	515	450	33	16	327.5	48	410	4	41.62	39.66
	350	580	510	36	16	359.5	54	465	4	62.11	59.66
	400	660	585	39	16	411	60	535	4	89.72	86.63

EN1092-1/2 Blind Flange Type 05

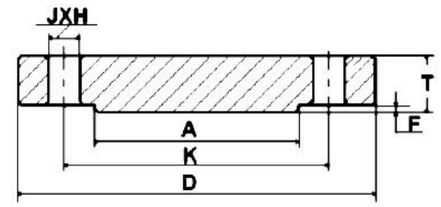

Pressure PN	Size DN	Outer diameter D	Center distance K	Aperture H	Hole count H	Thickness T	Waterline station A	Waterline height H	FF single weight kg	RF single weight kg
EN1092 105 PN10 Blind flange	10	90	60	14	4	16	40	2	0.72	0.65
	15	95	65	14	4	16	45	2	0.81	0.74
	20	105	75	14	4	18	58	2	1.14	1.05
	25	115	85	14	4	18	68	2	1.38	1.29
	32	140	100	18	4	18	78	2	2.03	1.88
	40	150	110	18	4	18	88	3	2.35	2.11
	50	165	125	18	4	18	102	3	2.88	2.59
	65	185	145	18	4	18	122	3	3.66	3.32
	80	200	160	18	8	20	138	3	4.62	4.28
	100	220	180	18	8	20	158	3	5.65	5.27
	125	250	210	18	8	22	188	3	8.13	7.68
	150	285	240	22	8	22	212	3	10.5	9.9
	200	340	295	22	8	24	268	3	16.54	15.81
	250	395	350	22	12	26	320	3	24.1	23.21
	300	445	400	22	12	26	370	4	30.84	29.47
	350	505	460	22	16	26	430	4	39.67	38.13
	400	565	515	26	16	26	482	4	49.47	47.6
	450	615	565	26	20	28	532	4	63.01	60.99
	500	670	620	26	20	28	585	4	75.22	72.92
	600	780	725	30	20	34	685	5	123.85	120.12

Pressure PN	Size DN	Outer diameter D	Center distance K	Aperture H	Hole count H	Thickness T	Waterline station A	Waterline height H	FF single weight kg	RF single weight kg
EN1092 105 PN16 Blind flange	15	95	65	14	4	16	45	2	0.81	0.74
	20	105	75	14	4	18	58	2	1.14	1.05
	25	115	85	14	4	18	68	2	1.38	1.29
	32	140	100	18	4	18	78	2	2.03	1.88
	40	150	110	18	4	18	88	3	2.35	2.11
	50	165	125	18	4	18	102	3	2.88	2.59
	65	185	145	18	4	18	122	3	3.66	3.32
	80	200	160	18	8	20	138	3	4.62	4.28
	100	220	180	18	8	20	158	3	5.65	5.27
	125	250	210	18	8	22	188	3	8.13	7.68
	150	285	240	22	8	22	212	3	10.5	9.9
	200	340	295	22	12	24	268	3	16.26	15.56
	250	405	355	26	12	26	320	3	25.01	24.02
	300	460	410	26	12	28	378	4	35.15	33.66
	350	520	470	26	16	30	438	4	48.05	46.38
	400	580	525	30	16	32	490	4	63.58	61.55
	450	640	585	30	20	40	550	4	96.65	94.45
	500	715	650	33	20	44	610	4	132.87	129.98
	600	840	770	36	20	54	725	5	226.46	221.7
	800	1025	950	39	24	62	900	5	387.94	381.64

EN1092-1/2 Blind Flange Type 05

Pressure PN	Size DN	Outer diameter D	Center distance K	Aperture H	Hole count H	Thickness T	Waterline station A	Waterline height H	FF single weight kg	RF single weight kg
EN1092 105 PN25 Blind flange	15	95	65	14	4	16	45	2	0.81	0.74
	20	105	75	14	4	18	58	2	1.14	1.05
	25	115	85	14	4	18	68	2	1.38	1.29
	32	140	100	18	4	18	78	2	2.03	1.88
	40	150	110	18	4	18	88	3	2.35	2.11
	50	165	125	18	4	20	102	3	3.2	2.91
	65	185	145	18	8	22	122	3	4.29	3.98
	80	200	160	18	8	24	138	3	5.54	5.2
	100	235	190	22	8	24	162	3	7.6	7.14
	125	270	220	26	8	26	188	3	10.83	10.23
	150	300	250	26	8	28	218	3	14.61	13.93
	200	360	310	26	12	30	278	3	22.49	21.67
	250	425	370	30	12	32	335	3	33.53	32.46
	300	485	430	30	16	34	395	4	46.32	44.73
	350	555	490	33	16	38	450	4	68.13	65.96
	400	620	550	36	16	40	505	4	89.75	87.07
	450	670	600	36	20	50	555	4	130.49	127.65
	500	730	660	36	20	51	615	4	159.53	156.35
	600	845	770	39	20	66	720	5	278.38	273.28

Pressure PN	Size DN	Outer diameter D	Center distance K	Aperture H	Hole count H	Thickness T	Waterline station A	Waterline height H	FF single weight kg	RF single weight kg
EN1092 105 PN40 Blind flange	15	95	65	14	4	16	45	2	0.81	0.74
	20	105	75	14	4	18	58	2	1.14	1.05
	25	115	85	14	4	18	68	2	1.38	1.29
	32	140	100	18	4	18	78	2	2.03	1.88
	40	150	110	18	4	18	88	3	2.35	2.11
	50	165	125	18	4	20	102	3	3.2	2.91
	65	185	145	18	8	22	122	3	4.29	3.98
	80	200	160	18	8	24	138	3	5.54	5.2
	100	235	190	22	8	24	162	3	7.6	7.14
	125	270	220	26	8	26	188	3	10.83	10.23
	150	300	250	26	8	28	218	3	14.61	13.93
	200	375	320	30	12	36	285	3	28.84	27.94
	250	450	385	33	12	38	345	3	44.41	43.11
	300	515	450	33	16	42	410	4	64.22	62.25
	350	580	510	36	16	46	465	4	89.59	87.14
	400	660	585	39	16	50	535	4	126.87	123.79
	450	685	610	39	20	57	560	4	154.32	151.23
	500	755	670	42	20	57	615	4	188.06	184.2
	600	890	795	48	20	72	735	5	331.41	325.06

Pressure PN	Size DN	Outer diameter D	Center distance K	Aperture H	Hole count H	Thickness T	Waterline station A	Waterline height H	FF single weight kg	RF single weight kg
EN1092 105 PN63 Blind flange	15	105	75	14	4	20	45	2	1.26	1.16
	20	130	90	18	4	22	58	2	2.12	1.97
	25	140	100	18	4	24	68	2	2.71	2.54
	32	155	110	22	4	24	78	2	3.27	3.07
	40	170	125	22	4	26	88	3	4.33	3.97
	50	180	135	22	4	26	102	3	4.87	4.52
	65	205	160	22	8	26	122	3	6.12	5.69
	80	215	170	22	8	28	138	3	7.32	6.89
	100	250	200	26	8	30	162	3	10.57	10
	125	295	240	30	8	34	188	3	16.75	15.92
	150	345	280	33	8	36	218	3	24.5	23.34
	200	415	345	36	12	42	285	3	40.6	39.2
	250	470	400	36	12	46	345	3	58.28	56.68
	300	530	460	36	16	52	410	4	83.47	81.2
	350	600	525	39	16	56	465	4	115.98	113.03
	400	670	585	42	16	60	535	4	155.73	152.42

EN1092-1/2 Welding-Neck Type 11

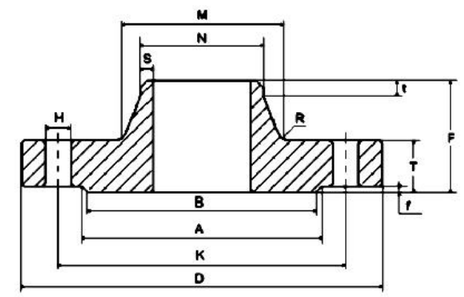

Pressure PN	Size DN	Outer diameter D	Center distance K	Aperture H	Hole count	Small head N	Plate thickness T	Total height F	Diameter t	Big head M	R	Waterline station A	Waterline height f	Wall thicknes S	Internal diameter	RF single weight kg	FF single weight kg
EN1092 –1/2 PN10 Welding neck	10	90	60	14	4	17.2	16	35	6	28	4	40	2	1.8	15.2	0.66	0.73
	15	95	65	14	4	21.3	16	38	6	32	4	45	2	2	17.3	0.76	0.84
	20	105	75	14	4	26.9	18	40	6	40	4	58	2	2.3	22.9	1.07	1.16
	25	115	85	14	4	33.7	18	40	6	49	4	68	2	2.6	29.7	1.28	1.38
	32	140	100	18	4	42.4	18	42	6	56	6	78	2	2.6	38.4	1.86	2.01
	40	150	110	18	4	48.3	18	45	7	64	6	88	3	2.6	44.3	2.09	2.34
	50	165	125	18	4	60.3	18	45	8	74	5	102	3	2.9	56.3	2.46	2.75
	65	185	145	18	4	76.1	18	45	10	92	6	122	3	2.9	72.1	3.06	3.39
	80	200	160	18	8	88.9	20	50	10	105	6	138	3	3.2	82.9	3.90	4.24
	100	220	180	18	8	114	20	52	12	131	8	158	3	3.6	108.3	4.47	4.86
	125	250	210	18	8	140	22	55	12	156	8	188	3	4	131.7	6.24	6.70
	150	285	240	22	8	168	22	55	12	184	10	212	3	4.5	160.3	7.50	8.10
	200	340	295	22	8	219	24	62	16	234	10	268	3	6.3	207.1	11.43	12.17
	250	395	350	22	12	273	26	68	16	292	12	320	3	6.3	261.0	15.31	16.20
	300	445	400	22	12	324	26	68	16	342	12	370	4	7.1	309.9	17.90	19.27
	350	505	460	22	16	356	26	68	16	385	12	430	4	7.1	341.6	24.70	26.24
	400	565	515	26	16	406	26	72	16	440	12	482	4	7.1	392.4	30.03	31.90
	450	615	565	26	20	457	28	72	16	488	12	532	4	7.1	443.0	34.42	36.43
	500	670	620	26	20	508	28	75	16	542	12	585	4	7.1	494.0	39.92	42.22
	600	780	725	30	20	610	30	82	18	642	12	685	5	7.1	594.0	52.76	56.50

Pressure PN	Size DN	Outer diameter D	Center distance K	Aperture H	Hole count	Small head N	Plate thickness T	Total height F	Diameter t	Big head M	R	Waterline station A	Waterline height f	Wall thicknes S	Internal diameter	RF single weight kg	FF single weight kg
EN1092 –1/2 PN16 Welding neck	10	90	60	14	4	17.2	16	35	6	28	4	40	2	1.8	15.2	0.66	0.73
	15	95	65	14	4	21.3	16	38	6	32	4	45	2	2	17.3	0.76	0.84
	20	105	75	14	4	26.9	18	40	6	40	4	58	2	2.3	22.9	1.07	1.16
	25	115	85	14	4	33.7	18	40	6	46	4	68	2	2.6	29.7	1.28	1.38
	32	140	100	18	4	42.4	18	42	6	56	6	78	2	2.6	38.4	1.86	2.01
	40	150	110	18	4	48.3	18	45	7	64	6	88	3	2.6	44.3	2.09	2.34
	50	165	125	18	4	60.3	18	45	8	74	5	102	3	2.9	56.3	2.46	2.75
	65	185	145	18	4	76.1	18	45	10	92	6	122	3	2.9	72.1	3.06	3.39
	80	200	160	18	8	88.9	20	50	10	105	6	138	3	3.2	82.9	3.90	4.24
	100	220	180	18	8	114	20	52	12	131	8	158	3	3.6	108.3	4.47	4.86
	125	250	210	18	8	140	22	55	12	156	8	188	3	4	131.7	6.24	6.70
	150	285	240	22	8	168	22	55	12	184	10	212	3	4.5	160.3	7.50	8.10
	200	340	295	22	12	219	24	62	16	235	10	268	3	6.3	207.1	11.43	11.94
	250	405	355	26	12	273	26	70	16	292	12	320	3	6.3	261.0	16.27	17.26
	300	460	410	26	12	324	28	78	16	344	12	378	4	7.1	309.9	21.84	23.34
	350	520	470	26	16	356	30	82	16	390	12	438	4	7.1	339.6	32.62	34.29
	400	580	525	30	16	406	32	85	16	445	12	490	4	7.1	390.4	40.88	42.90
	450	640	585	30	20	457	40	87	16	490	12	550	4	7.1	441.0	55.07	57.27
	500	715	650	33	20	508	44	90	16	548	12	610	4	7.1	492.0	74.68	77.58
	600	840	770	36	20	610	54	95	18	652	12	725	5	7.1	594.0	115.61	120.36

EN1092-1/2 Welding-Neck Type 11

Pressure PN	Size DN	Outer diameter D	Center distance K	Aperture H	Hole count	Small head N	Plate thickness T	Total height F	Diameter t	Big head M	R	Waterline station A	Waterline height f	Wall thicknes S	Internal diameter	RF single weight kg	FF single weight kg
EN1092 -1/2 PN25 Welding neck	10	90	60	14	4	17.2	16	35	6	28	4	40	2	1.8	13.6	0.67	0.74
	15	95	65	14	4	21.3	16	38	6	32	4	45	2	2	17.3	0.76	0.84
	20	105	75	14	4	26.9	18	40	6	40	4	58	2	2.3	22.3	1.08	1.17
	25	115	85	14	4	33.7	18	40	6	46	4	68	2	2.6	28.5	1.30	1.40
	32	140	100	18	4	42.4	18	42	6	56	6	78	2	2.6	37.2	1.88	2.03
	40	150	110	18	4	48.3	18	45	7	64	6	88	3	2.6	43.1	2.12	2.36
	50	165	125	18	4	60.3	20	48	8	75	6	102	3	2.9	54.5	2.82	3.11
	65	185	145	18	8	76.1	22	52	10	90	6	122	3	2.9	70.3	3.67	3.98
	80	200	160	18	8	88.9	24	58	12	105	8	138	3	3.2	82.5	4.74	5.08
	100	235	190	22	8	114	24	65	12	134	8	162	3	3.6	107.1	6.44	6.90
	125	270	220	26	8	140	26	68	12	162	8	188	3	4	131.7	8.85	9.45
	150	300	250	26	8	168	28	75	12	192	10	218	3	4.5	159.3	11.60	12.28
	200	360	310	26	12	219	30	80	16	244	10	278	3	6.3	206.5	17.16	17.97
	250	425	370	30	12	273	32	88	18	298	12	335	3	7.1	258.8	24.26	25.33
	300	485	430	30	16	324	34	92	18	352	12	395	4	8	307.7	31.78	33.38
	350	555	490	33	16	356	38	100	20	398	12	450	4	8	339.6	49.11	51.29
	400	620	550	36	16	406	40	110	20	452	12	505	4	8.8	388.8	64.04	66.72
	450	670	600	36	20	457	46	110	20	500	12	555	4	8.8	439.4	76.59	79.42
	500	730	660	36	20	508	48	125	20	558	12	615	4	10	488.0	98.27	101.45
	600	845	770	39	20	610	58	125	20	660	12	720	5	11	588.0	139.57	144.67

Pressure PN	Size DN	Outer diameter D	Center distance K	Aperture H	Hole count	Small head N	Plate thickness T	Total height F	Diameter t	Big head M	R	Waterline station A	Waterline height f	Wall thicknes S	Internal diameter	RF single weight kg	FF single weight kg
EN1092 -1/2 PN40 Welding neck	10	90	60	14	4	17.2	16	35	6	28	4	40	2	1.8	13.6	0.67	0.74
	15	95	65	14	4	21.3	16	38	6	32	4	45	2	2	17.3	0.76	0.84
	20	105	75	14	4	26.9	18	40	6	40	4	58	2	2.3	22.3	1.08	1.17
	25	115	85	14	4	33.7	18	40	6	46	4	68	2	2.6	28.5	1.30	1.40
	32	140	100	18	4	42.4	18	42	6	56	6	78	2	2.6	37.2	1.88	2.03
	40	150	110	18	4	48.3	18	45	7	64	6	88	3	2.6	43.1	2.12	2.36
	50	165	125	18	4	60.3	20	48	8	75	6	102	3	2.9	54.5	2.82	3.11
	65	185	145	18	8	76.1	22	52	10	90	6	122	3	2.9	70.3	3.67	3.98
	80	200	160	18	8	88.9	24	58	12	105	8	138	3	3.2	82.5	4.74	5.08
	100	235	190	22	8	114	24	65	12	134	8	162	3	3.6	107.1	6.44	6.90
	125	270	220	26	8	140	26	68	12	162	8	188	3	4	131.7	8.85	9.45
	150	300	250	26	8	168	28	75	12	192	10	218	3	4.5	159.3	11.60	12.28
	200	375	320	30	12	219	34	88	16	244	10	285	3	6.3	206.5	21.05	21.95
	250	450	385	33	12	273	38	105	18	306	12	345	3	7.1	258.8	34.37	35.67
	300	515	450	33	16	324	42	115	18	362	12	410	4	8	307.7	47.96	49.92
	350	580	510	36	16	356	46	125	20	408	12	465	4	8.8	338.0	70.08	72.53
	400	660	585	39	16	406	50	135	20	462	12	535	4	11	384.4	99.58	102.67
	450	685	610	39	20	457	57	135	20	500	12	560	4	12.5	432.0	105.98	109.07
	500	755	670	42	20	508	57	140	20	562	12	615	4	14.2	479.6	132.09	135.96
	600	890	795	48	20	610	72	150	20	666	12	735	5	16	578.0	211.76	218.11

Pressure PN	Size DN	Outer diameter D	Center distance K	Aperture H	Hole count	Small head N	Plate thickness T	Total height F	Diameter t	Big head M	R	Waterline station A	Waterline height f	Wall thicknes S	Internal diameter	RF single weight kg	FF single weight kg
EN1092 -1/2 PN63 Welding neck	10	100	70	14	4	17.2	20	45	6	32	4	40	2	1.8	13.6	1.09	1.18
	15	105	75	14	4	21.3	20	45	6	34	4	45	2	2	17.3	1.2	1.3
	20	130	90	18	4	26.9	22	48	8	42	4	58	2	2.6	21.7	2.02	2.17
	25	140	100	18	4	33.7	24	58	8	52	4	68	2	2.6	28.5	2.64	2.8
	32	155	110	22	4	42.4	24	60	8	62	6	78	2	2.9	36.6	3.18	3.38
	40	170	125	22	4	48.3	26	62	10	70	6	88	3	2.9	42.5	4.06	4.41
	50	180	135	22	4	60.3	26	62	10	82	6	102	3	2.9	54.5	4.5	4.88
	65	205	160	22	8	76.1	26	68	12	98	6	122	3	3.2	69.7	5.62	6.05
	80	215	170	22	8	88.9	28	72	12	112	8	138	3	3.6	81.7	6.66	7.09
	100	250	200	26	8	114	30	78	12	138	8	162	3	4	106.3	9.27	9.84
	125	295	240	30	8	140	34	88	12	168	8	188	3	4.5	130.7	14.53	15.36
	150	345	280	33	8	168	36	95	12	202	10	218	3	5.6	157.1	21.35	22.52
	200	415	345	36	12	219	42	110	16	256	10	285	3	7.1	204.9	34.38	35.78
	250	470	400	36	12	273	46	125	18	316	12	345	3	8.8	255.4	48.65	50.25
	300	530	460	36	16	324	52	140	18	372	12	410	4	11	301.9	68.2	70.48
	350	600	525	39	16	356	56	150	20	420	12	465	4	12.5	330.6	99.1	102
	400	670	585	42	16	406	60	160	20	475	12	535	4	14.2	378	131.19	134.51

Seamless Steel Tube

Cold-Drawing Seamless Steel Pipe Process Flow Chart

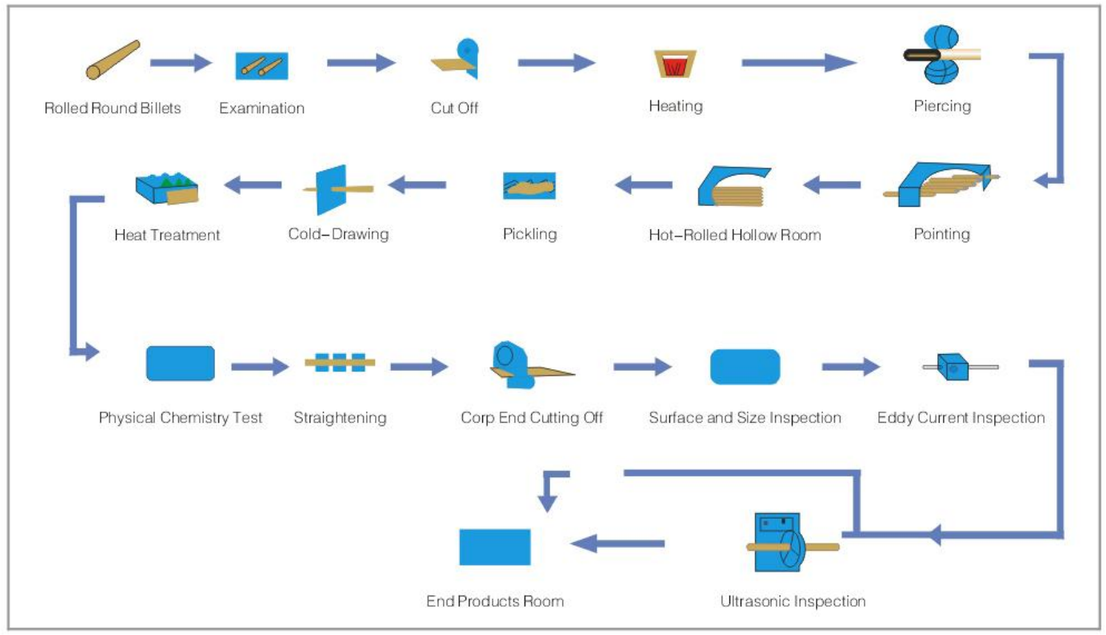

Hot-Rolling Seamless Steel Pipe Process Flow Chart

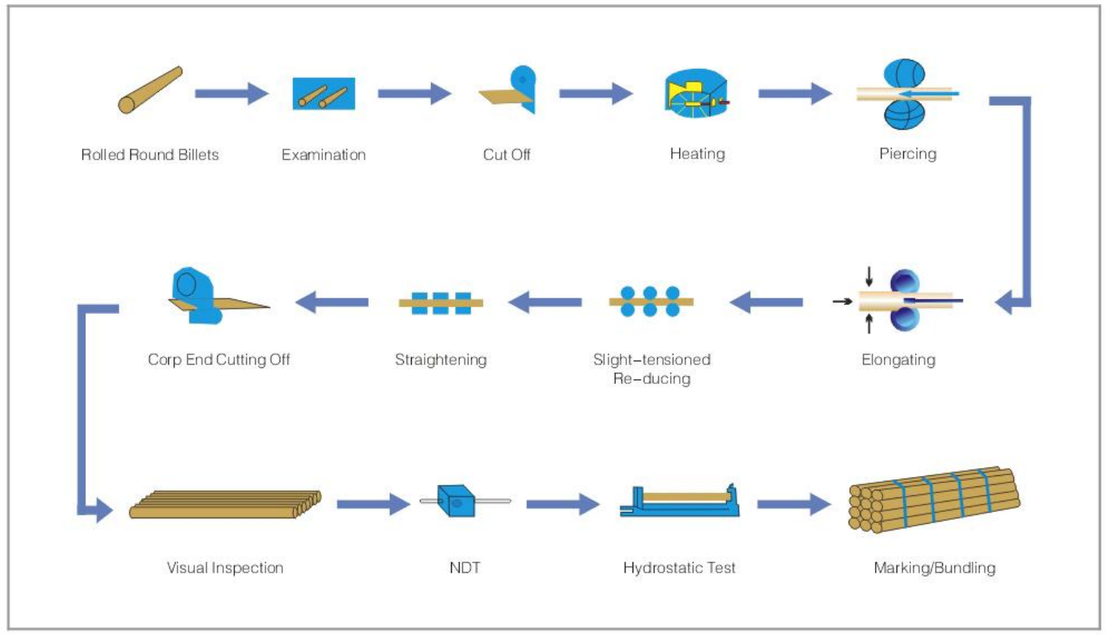

Single-or dual-feeding available, fueled by lpg, automated furnace-temperature. Furnace-pressure and furnace flow, domestical-topping controlling performance.

The punching machine can be adjusted automatically and locked hydraulically. This unit features in stable punching process, uniform hair canal wall thickness etc. This machine is advanced at home.

Conical roller, big disk, flexible adjustment, hydraulic-controlled lock system and balance system, easy and reliable operation.

Slight-tensioned reducing mill
Straightener
Cooling bed
Pipe cutter

1	2
3	4

1	
2	3

Pipe expander
Hydrostatic test equipments
Ultrasonic crack detector

1 Leeakage magnetic flow detector

2 Cold-draw Workshop

Complete inspection instruments and perfect inspection process flow is powerful guarantee for high quality production.

Size and Weight of Seamless Roll Steel Pipe — **ASME B36.10M–1996**

Nominal Diameter		Outside Diameter		(STD) (XS) (XXS)	Sch. no	Wall Thickness		Nominal Weight	
NPS	DN	in	mm			in	mm	lb/ft	kg/m
1/8	…	0.405	10.3	STD	40	0.068	1.73	0.24	0.37
				XS	80	0.095	2.41	0.31	0.47
1/4	…	0.540	13.7	STD	40	0.088	2.24	0.42	0.63
				XS	80	0.119	3.02	0.54	0.80
3/8	10	0.675	17.1	STD	40	0.091	2.31	0.57	0.84
				XS	80	0.126	3.20	0.74	1.10
1/2	15	0.840	21.3	STD	40	0.109	2.77	0.85	1.27
				XS	80	0.147	3.73	1.09	1.62
				…	160	0.188	4.78	1.31	1.95
3/4	20	1.050	26.7	STD	40	0.113	2.87	1.13	1.69
				XS	80	0.154	3.91	1.47	2.20
				…	160	0.219	5.56	1.94	2.90
1	25	1.315	33.4	STD	40	0.133	3.38	1.68	2.50
				XS	80	0.179	4.55	2.17	3.24
				…	160	0.250	6.35	2.84	4.24
1 1/4	32	1.660	42.2	STD	40	0.140	3.56	2.27	3.39
				XS	80	0.191	4.85	3.00	4.47
				…	160	0.250	6.35	3.76	5.61
1 1/2	40	1.900	48.3	STD	40	0.145	3.68	2.72	4.05
				XS	80	0.200	5.08	3.63	5.41
				…	160	0.281	7.14	4.86	7.25
2	50	2.375	60.3	STD	40	0.154	3.91	3.65	5.44
				XS	80	0.218	5.54	5.02	7.48
				…	160	0.344	8.74	7.46	11.11
2 1/2	65	2.875	73.0	STD	40	0.203	5.16	5.79	8.63
				XS	80	0.276	7.01	7.66	11.41
				…	160	0.375	9.35	10.01	14.92
3	80	3.500	88.9	STD	40	0.216	5.49	7.58	11.29
				XS	80	0.300	7.62	10.25	15.27
				…	160	0.438	11.13	14.32	21.35
3 1/2	…	4.00	101.6	STD	40	0.226	5.74	9.11	13.57
				XS	80	0.318	8.08	12.50	18.63
4	100	4.500	114.3	STD	40	0.237	6.02	10.79	16.07
				XS	80	0.337	8.56	14.98	22.32
				…	120	0.438	11.13	19.00	28.32
				…	160	0.531	13.49	22.51	33.54
5	125	5.563	141.3	STD	40	0.258	6.55	14.62	21.77
				XS	80	0.375	9.53	20.78	30.97
				…	120	0.500	12.70	27.04	40.28
				…	160	0.625	15.88	32.96	49.11
6	150	6.625	168.3	STD	40	0.280	7.11	18.97	28.26
				XS	80	0.432	10.97	28.57	42.56
				…	120	0.562	14.27	36.39	54.20
				…	160	0.719	18.26	45.35	67.56
8	200	8.625	219.1	STD	40	0.322	8.18	28.55	42.55
				XS	80	0.500	12.70	43.39	64.64
				…	120	0.719	18.26	60.71	90.44
				…	160	0.906	23.01	74.69	111.27
10	250	10.750	273.0	…	20	0.250	6.35	28.04	41.77
				STD	40	0.365	9.27	40.48	60.31
				…	80	0.594	15.09	64.43	96.01
				…	120	0.844	21.44	89.29	133.06
				…	160	1.125	28.58	115.64	172.33
12	300	12.750	323.8	…	20	0.250	6.35	33.38	49.73
				…	40	0.406	10.31	53.52	79.73
				…	80	0.688	17.48	88.63	132.08
				XXS	120	1.000	25.40	125.49	186.97
				…	160	1.312	33.32	160.27	238.76

Size and Weight of Seamless Roll Steel Pipe

ASME B36.10M–1996

Nominal Diameter		Outside Diameter		(STD) (XS) (XXS)	Sch. no	Wall Thickness		Nominal Weight	
NPS	DN	in	mm			in	mm	lb/ft	kg/m
14	350	14.000	355.6	···	10	0.250	6.35	36.71	54.69
				···	20	0.312	7.92	45.61	67.90
				STD	30	0.375	9.53	54.57	81.33
				···	40	0.438	11.13	63.44	94.55
				···	60	0.594	15.09	85.05	126.71
				···	80	0.750	19.05	106.13	158.10
				···	120	1.094	27.79	150.79	224.65
				···	160	1.406	35.71	189.11	281.70
16	400	16.000	406.4	···	20	0.312	7.92	52.27	77.83
				STD	30	0.375	9.53	62.58	93.27
				XS	40	0.500	12.70	82.77	123.30
				···	60	0.656	16.66	107.50	160.12
				···	80	0.844	21.44	136.61	203.53
18	450	18.000	457	···	20	0.312	7.92	58.94	87.71
				···	30	0.438	11.13	82.15	122.38
				···	40	0.562	14.27	104.67	155.80
				···	60	0.750	19.05	138.17	205.74
				···	80	0.938	23.83	170.92	254.55
				···	100	1.156	29.36	207.96	309.62
20	500	20.000	508	STD	20	0.375	9.53	78.60	117.15
				XS	30	0.500	12.70	104.13	155.12
				···	40	0.594	15.09	123.11	183.42
				···	60	O.812	20.62	166.40	247.83
				···	80	1.031	26.19	208.87	311.17
22	550	22.000	559	STD	20	0.375	9.53	86.61	129.13
				XS	30	0.500	12.70	114.81	171.09
				···	60	0.875	22.23	197.41	294.25
				···	80	1.125	28.58	250.81	373.83
				···	100	1.375	34.93	302.88	451.42
24	600	24.000	610	STD	20	0.375	9.53	94.62	141.12
				···	30	0.562	14.27	140.68	209.64
				···	40	0.688	17.48	171.29	255.41
				···	60	0.969	24.61	238.35	355.26
				···	80	1.219	30.96	296.58	442.08
26	650	26.000	660	STD	···	0.375	9.53	102.63	152.87
				···	···	0.406	10.31	110.98	165.18
				XS	20	0.500	12.70	136.17	202.72
				···	···	0.562	14.27	152.68	227.23
28	700	28.000	711	STD	···	0.375	9.53	110.64	164.85
				···	···	0.406	10.31	119.65	178.15
				XS	20	0.500	12.70	146.85	218.69
				···	···	0.562	14.27	164.69	245.18
				···	30	0.625	15.88	182.73	271.21
30	750	30.000	762	STD	···	0.375	9.53	118.65	176.84
				···	···	0.406	10.31	128.32	191.11
				XS	20	0.500	12.70	157.53	234.67
				···	···	0.562	14.27	176.69	263.12
				···	30	0.625	15.88	196.08	292.18
32	800	32.000	813	···	10	0.311	7.92	105.66	157.28
				···	20	0.5	12.70	168.32	250.55
				···	30	0.311	15.88	209.57	311.95
				STD	···	0.375	9.53	126.74	188.66
				···	40	0.688	17.48	230.23	342.70

ASME, JIS, DIN Steel Pipe Outside Diameter and Wall Thickness

Unit: mm

Nominal Pipe Size		Outside Diameter			Nominal Wall Thickness														
A	B	ASME	JIS	DIN	JIS(1)	DIN(2)	SCH10	SCH20	SCH30	STD	SCH40	SCH60	XS	SCH80	SCH100	SCH120	SCH140	SCH160	XXS
15	1/2"	21.3	21.7	21.3	2.8	2.0	2.11	–	2.41	2.77	2.77	–	3.73	3.73	–	–	–	4.78	7.47
20	3/4"	26.7	27.2	26.9	2.8	2.3	2.11	–	2.41	2.87	2.87	–	3.91	3.91	–	–	–	5.56	7.82
25	1"	33.4	34.0	33.7	3.2	2.6	2.77	–	2.90	3.38	3.38	–	4.55	4.55	–	–	–	6.35	9.09
32	11/4"	42.2	42.7	42.4	3.5	2.6	2.77	–	2.97	3.56	3.56	–	4.85	4.85	–	–	–	6.35	9.70
40	11/2"	48.3	48.6	48.3	3.5	2.6	2.77	–	3.18	3.68	3.68	–	5.08	5.08	–	–	–	7.14	10.15
50	2"	60.3	60.5	60.3	3.8	2.9	2.77	–	3.18	3.91	3.91	–	5.54	5.54	–	–	–	8.74	11.07
65	21/2"	73.0	76.3	76.1	4.2	2.9	3.05	–	4.78	5.16	5.16	–	7.01	7.01	–	–	–	9.53	14.02
80	3	88.9	89.1	88.9	4.2	3.2	3.05	–	4.78	5.49	5.49	–	7.62	7.62	–	–	–	11.13	15.24
90	31/2"	101.6	101.6	–	4.2	–	3.05	–	4.78	5.74	5.74	–	8.08	8.08	–	–	–	–	–
100	4"	114.3	114.3	114.3	4.5	3.6	3.05	–	4.78	6.02	6.02	–	8.56	8.56	–	11.13	–	13.49	17.12
125	5"	141.3	139.8	139.7	4.5	4.0	3.40	–	–	6.55	6.55	–	9.53	9.53	–	12.70	–	15.88	19.05
150	6"	168.3	165.2	168.3	5.0	4.5	3.40	4.5	–	7.11	7.11	–	10.97	10.97	–	14.27	–	18.26	21.95
200	8"	219.1	216.3	219.1	5.8	6.3	3.76	6.35	7.04	8.18	8.18	10.31	12.70	12.70	15.09	18.26	20.62	23.01	22.23
250	10"	273.0	267.4	273.0	6.6	6.3	4.19	6.35	7.80	9.27	9.27	12.70	12.70	15.0g	18.26	21.44	25.40	28.58	25.40
300	12"	323.8	318.5	323.9	6.9	7.1	4.57	6.35	8.38	9.53	10.31	14.27	12.70	17.48	21.44	25.40	28.58	33.32	25.40
350	14"	355.6	355.6	355.6	7.9	8.0	6.35	7.92	9.53	9.53	11.13	15.09	12.70	19.05	23.83	27.79	31.75	35.71	–
400	16"	406.4	406.4	406.4	7.9	8.8	6.35	7.92	9.53	9.53	12.70	16.66	12.70	21.44	26.19	30.96	36.53	40.49	–
450	18"	457.2	457.2	457.0	7.9	10.0	6.35	7.92	11.13	9.53	14.27	19.05	12.70	23.83	29.36	34.93	39.67	45.24	–
500	20"	508.0	508.0	508.0	7.9	11.0	6.35	9.53	12.70	9.53	15.09	20.62	12.70	26.19	32.54	38.10	44.45	50.01	–
550	22"	558.8	558.8	–	–	–	6.35	9.53	12.70	9.53	–	22.23	12.70	28.58	34.93	41.28	47.63	53.98	–
600	24"	609.6	609.6	610.0	–	12.5	6.35	9.53	14.27	9.53	17.48	24.61	12.70	30.96	38.89	46.02	52.37	59.54	–
650	26"	660.4	660.4	–	–	–	7.92	12.70	–	9.53	–	–	12.70	–	–	–	–	–	–
700	28"	711.2	711.2	711.0	–	12.5	7.92	12.70	15.88	9.53	–	–	12.70	–	–	–	–	–	–
750	30"	762.0	762.0	–	–	–	7.92	12.70	15.88	9.53	–	–	12.70	–	–	–	–	–	–
800	32"	812.8	812.8	813.0	–	12.5	7.92	12.70	15.88	9.53	17.48	–	12.70	–					–
850	34"	863.6	863.6	–	–	–	7.92	12.70	15.88	9.53	17.48	–	12.70	–	JIS G3452 ASME B36.10M				–
900	36"	914.4	914.4	914.0	–	12.5	7.92	12.70	15.88	9.53	19.05	–	12.70	–	JIS G3454 DIN 2448				–
950	38"	965.2	965.2	–	–	–	–	–	–	9.53	–	–	12.70	–	JIS G3455 DIN 2458				–
1000	40"	1016.0	1016.0	1016.0	–	12.5	–	–	–	9.53	–	–	12.70	–	JIS G3457				–
1050	42"	1066.8	1066.8	–	–	–	–	–	–	9.53	–	–	12.70	–	–	–	–	–	–
1100	44"	1117.6	1117.6	–	–	–	–	–	–	9.53	–	–	12.70	–	–	–	–	–	–
1150	46"	1168.4	1168.4	–	–	–	–	–	–	9.53	–	–	12.70	–	–	–	–	–	–
1200	48"	1219.2	1219.2	1220.0	–	–	–	–	–	9.53	–	–	12.70	–	–	–	–	–	–

Note: (1) The wall thickness specified is grade is grade fsgp of JIS B2311: 1997
(2) The wall thickness specified is for series 3 of DIN 2605 (part 1): 02.91

API 5L Chemical Components and Mechanical Property PSL 1:

Class and Sort	Chemical Components				Mechanical Property			
	C(Max)	Mn(Max)	P(Max)	S(Max)	Tensile Strength (Min)		Yield Strength (Min)	
					psi	MPa	psi	MPa
A25	0.21	0.60	0.030	0.030	45000	310	25400	175
A25P	0.21	0.60	0.045～0.080	0.030				
A	0.22	0.90	0.030	0.030	48600	335	30500	210
B	0.28	1.20	0.030	0.030	60200	415	35500	245
X42	0.28	1.30	0.030	0.030	60200	415	42100	290
X46	0.28	1.40	0.030	0.030	63100	435	46400	320
X52	0.28	1.40	0.030	0.030	66700	460	52200	360
X56	0.28	1.40	0.030	0.030	71100	490	56600	390
X60	0.28	1.40	0.030	0.030	75400	520	60200	415
X65	0.28	1.40	0.030	0.030	77600	535	65300	450
X70	0.28	1.40	0.030	0.030	82700	570	70300	485

API 5L Chemical Components and Mechanical Property PSL 2:

Class and Sort	Chemical Components											
	Max	Max	Max	Max	Tensile Strength (Min)		Tensile Strength (Max)		Yield Strength (Min)		Yield Strength (Max)	
					psi	MPa	psi	MPa	psi	MPa	psi	MPa
BN	0.24	1.20	0.025	0.015	60200	415	95000	655	35500	245	65300	450
X42N	0.24	1.20	0.025	0.015	60200	415	95000	655	42100	290	71800	495
X46N	0.24	1.40	0.025	0.015	63100	435	95000	655	46400	320	76100	525
X52N	0.24	1.40	0.025	0.015	66700	460	110200	760	52200	360	76900	530
X56N	0.24	1.40	0.025	0.015	71100	490	110200	760	56600	390	79000	545
X60N	0.24	1.40	0.025	0.015	75400	520	110200	760	60200	415	81900	565
X65Q	0.18	1.70	0.025	0.015	77600	535	110200	760	65300	450	87000	600
X70Q	0.18	1.80	0.025	0.015	82700	570	110200	760	70300	485	92100	635
X80Q	0.18	1.90	0.025	0.015	90600	625	119700	825	80500	555	102300	705

The common materials: 20# and Q345. Technical Standard: API 5L B, ASTM A106 GR.B, ASTM A53 GR.B; High-pressure boiler pipe GB5310-2009, Special pipe for fertilizer making GB6479-2013, pipe for petroleum cracking GB9948-2013, low-and medium-pressure boiler pipe GB3087-2008, fluid pipe GB/T8163-2008, structural pipe GB/T8162-2008 and hydraulic support pipe GB/T17396-2009.

A53 Chemical Components and Mechanical Property

Standard	Trade Mark	Chemical Components										Mechanical Property		
		C	Si	Mn	P	S	Cu	Ni	Mo	Cr	V	Tensile Strength (MPa)	Yield Strength (MPa)	Elongation (%)
ASTM A53	A	≤0.25	/	≤0.95	≤0.05	≤0.045	≤0.40	≤0.40	≤0.15	≤0.40	≤0.08	≥330	≥205	≥29.5
	B	≤0.30	/	≤1.2	≤0.05	≤0.045	≤0.40	≤0.40	≤0.15	≤0.40	≤0.08	≥415	≥240	≥29.5

A106 Chemical Components and Mechanical Property

Standard	Trade Mark	Chemical Components									Mechanical Property		
		C	Si	Mn	P, S	Cu	Ni	Mo	Cr	V	Tensile Strength (MPa)	Yield Strength (MPa)	Elongation (%)
ASTM A106	B	≤0.30	≤0.10	0.29~1.06	≤0.035	≤0.40	≤0.40	≤0.15	≤0.40	≤0.08	≥415	≥240	≥30
	C	≤0.35	≤0.10	0.29~1.06	≤0.035	≤0.40	≤0.40	≤0.15	≤0.40	≤0.08	≥485	≥275	≥30

A179 Chemical Components and Mechanical Property

Standard	Trade Mark	Chemical Components									Mechanical Property		
		C	Si	Mn	P, S	Cu	Ni	Mo	Cr	V	Tensile Strength (MPa)	Yield Strength (MPa)	Elongation (%)
ASTM A179	A179	0.06~0.18	/	0.27~0.63	≤0.035	/	/	/	/	/	≥325	≥180	35

A192 Chemical Components and Mechanical Property

Standard	Trade Mark	Chemical Components							Mechanical Property		
		C	Si	Mn	P, S	Cu	Ni	Mo	Tensile Strength (MPa)	Yield Strength (MPa)	Elongation (%)
ASTM A192	A192	0.06~0.18	≤0.25	0.27~0.63	≤0.035	/	/	/	≥325	≥180	≥35

370 Chemical Components and Mechanical Property

Trade Mark	Chemical Components					Mechanical Property		
	C	Si	Mn	P	S	Tensile Strength (MPa)	Yield Strength (MPa)	Elongation (%)
STPG 370	≤0.25	≤0.35	0.30~0.90	≤0.040	≤0.040	≥370	≥216	30
STS 370	≤0.25	0.10~0.35	0.30~1.10	≤0.035	≤0.035	≥370	≥215	30
STPT 370	≤0.25	0.10~0.35	0.30~0.90	≤0.035	≤0.035	≥370	≥215	30

A213 Chemical Components and Mechanical Property

Standard	Trade Mark	Chemical Components									Mechanical Property		
		C	Si	Mn	P,S	Cu	Ni	Mo	Cr	V	Tensile Strength (MPa)	Yield Strength (MPa)	Elongation (%)
ASTM A213	A213T11	0.05~0.15	0.50–1.00	0.30~0.60	≤0.025	/	/	0.44~0.65	1.0~1.5	/	≥415	≥170	≥30
	A213T12	0.05~0.15	≤0.50	0.30~0.61	≤0.025	/	/	0.44~0.65	0.80~1.25	/	≥415	≥220	≥30
	A213T22	0.05~0.15	≤0.50	0.30~0.60	≤0.025	/	/	0.87~1.13	1.90~2.60	/	≥415	≥205	≥30

A210 Chemical Components and Mechanical Property

Standard	Trade Mark	Chemical Components									Mechanical Property		
		C	Si	Mn	P,S	Cu	Ni	Mo	Cr	V	Tensile Strength (MPa)	Yield Strength (MPa)	Elongation (%)
ASTM A210	A210A1	≤0.27	≥0.10	≤0.93	≤0.35	/	/	/	/	/	≥415	≥255	≥30
	A210C	≤0.35	≥0.10	0.29~1.06	≤0.35	/	/	/	/	/	≥485	≥275	≥30

GB9948–2006 Outdiameter and Wall Thickness Tolerance

Classification	Production Technology	Norminal Pipe Size		Tolerance	
				Usual	High Class
WH	Hot rolling (extruded) steel pipe	Outer Diameter(D)	≤50	±0.50	±0.30
			>50~159	±1%D	±0.75%D
			>159	±1%D	±0.9%D
		Wall Thickness (S)	≤20	+15%S −10%S	±10%S
			>20	+12.5%S −10%S	±10%S
	Hot Expantion	Outer Diameter(D)	All	±1%D	
		Wall Thickness (S)	All	±15%S	
WC	Cold Drawning steel pipe	Outer Diameter(D)	14~30	±0.20	±0.15
			>30~50	±0.30	±0.25
			>50	±0.75%D	±0.6%D
		Wall Thickness (S)	≤3.0	+12.5%S −10%S	±10%S
			>3.0	±10%S	±7.5%S

All Kinds of Standards of Seamless Steel Pipe Chemical Composition and Mechanical Properties

Structural Pipe

Trade Mark	Chemical Composition(Smelt analysis) %							
	C	Si	Mn	P	S	Cr	Ni	Cu
				Mpa Min.				
10	0.07–0.13	0.17–0.37	0.35–0.65	0.035	0.035	0.15	0.30	0.25
20	0.17–0.23	0.17–0.37	0.35–0.65	0.035	0.035	0.25	0.30	0.25
35	0.32–0.39	0.17–0.37	0.50–0.80	0.035	0.035	0.25	0.30	0.25
45	0.42–0.50	0.17–0.37	0.50–0.80	0.035	0.035	0.25	0.30	0.25

Mechanical Properties

Trade Mark	Tensile Strength	Yield Point MPa Min. Wall Thickness (mm)			Percentage Elongation (Lo=6do) % Min	Distance Between Plates Fir Flattening Tests (H)mm	Standards Adopted
		≤16mm	>16-30mm	>30mm			
10	≥335	205	195	185	24	2/3D	GB8162
20	≥410	245	235	225	20	2/3D	
35	≥510	305	295	285	17	–	
45	≥590	335	325	315	14	–	

Technical Parametere of Seamless Steel Pipe

All Kinds of Standards of Seamless Steel Pipe Chemical Composition and Mechanical Properties

Boiler Tube

Trade Mark	Steel Tube Classfication	Chemical Composition(Smelt analysis) %							
		C	Si	Mn	P	S	Cr	Mo	V
					MPa Min.				
10	Midium-Low Pressure Boiler Tube	0.07-0.13	0.07-0.37	0.35-0.65	0.035	0.035	0.15	-	-
20		0.17-0.23	0.17-0.37	0.35-0.65	0.035	0.035	0.25	-	-
20G	High Pressure Boiler Tube	0.17-0.23	0.17-0.37	0.35-0.65	0.025	0.015	-	-	-

Fluid Transfering Pipe

Trade Mark	Chemical Composition (Smelt analysis) %							
	C	Si	Mn	P	S	Cr	Ni	Cu
				MPa Min.				
20	0.17-0.23	0.17-0.37	0.35-0.65	0.035	0.035	0.25	0.30	0.25

Trade Mark	Mechanical Properties				
	Tensile Strength MPa	Yield Point MPa Min.		Percentage Elongation (Lo=6do) % Min	Standards Adopted
		Wall Thickness (mm)			
		≤16	>16		
20	410~530	245	235	20	GB8163

Outer Diameter Wall Thickness Tolerance Table

Seamless Steel Tube

API 5L Tolerances for Diameter and Wall Thickness API 5L

Tolerance[a] (Percent of Specified Wall Thickness)			
Size	Type of Pipe	Grade B or Lower	Grade X42 or Higher
≤ 2 7/8	All	+20.0, -12.5	+15.0, -12.5
> 2 7/8 and < 20	All	+15.0, -12.5	+15.0, -12.5
≥ 20	Welded	+17.5, -12.5	+19.5, -8.0
≥ 20	Seamless	+15.0, -12.5	+17.5, -10.0

[a]Where negatice tolerances smaller than those listed are specified by the purchaser, the positive tolerance shall be increased to the applicable total tolerance range in percent less the wall thickness negative tolerance.

Tolerance for Diameter AT Pipe Ends

Out - of - Roundness					
Size	Minus Tolerance	Plus Tolerance	End-to-End Tolerance	Diameter, Axis Tolerance (Percent of Specified OD)[a]	Maximum Differential Between Minimum and Maximum Diameters (Applies only to Pipe with D/t≤75)
≤ 10 3/4	1/64(0.4mm)	1/16(1.6mm)	-	-	-
> 10 3/4 and ≤ 20	1/32(0.8mm)	3/32(2.4mm)	-	-	-
> 20 and ≤ 42	1/32(0.8mm)	3/32(2.4mm)	b	±1%	≤0.500in.(12.7mm)
> 20	1/32(0.8mm)	3/32(2.4mm)	b	±1%	≤0.625in.(15.9mm)

[a]Out-of-roundness tolerances apply to maximum and minimum diameters as measured with a bar gage, caliper, or device measuring actualmaximum and minimum diameters.

[b]The average diameter(as measured with a diameter tape) of one end of pipe shall not differ by more than 3/32in. (2.4mm) from that of the other end.

ASTM A106 Outdiamiter & Wall Thickness Tolerance ASTM A106

NPS(DN) Designator	Permissible Variations in Outside Diameter
1/8" ~1 1/2" (6~40)	± 1/64in (± 0.4mm)
1 1/2"<NPS≤4" (40~100)	± 1/32in (0.8mm)
4"<NPS≤8" (100~200)	-1/32in~+1/16in (-0.8mm~+1.6mm)
8"<NPS≤18" (200~450)	-1/32in~+3/32in (-0.8mm~+2.4mm)
18"<NPS≤26" (450~650)	-1/32in~+1/8in (-0.8mm~+3.2mm)
26"<NPS≤34" (650~850)	-1/32in~+5/32in (-0.8mm~+4mm)
34"<NPS≤48" (850~1200)	-1/32in~+3/16in (-0.8mm~+4.8mm)
Wall thickness tolerance	All plonts should be≥-12.5% the specified wall thickness